CCI Toolbox

User Requirements Document

Date :	**15.06.2018**
Version:	**Issue 5.1**
Contract Nr.:	**4000115250/15/I-NB**
Technical Officer:	**Dr. Simon Pinnock, ESA**
	Simon.Pinnock@esa.int
Technical Manager:	**Ed Pechorro, ESA**
	Ed.Pechorro@esa.int

Signatures

Title : **User Requirements Document**

Issue Date : **15.June 2018**

Authored:

Vivien Priemer

Approved:

Rainer Hollmann

Approved:

Norman Fomferra

Approved:

Anna Corlyon

Address: Brockmann Consult GmbH
Max-Planck-Str. 2
21502 Geesthacht
Germany

Document Change Record

Document, Version	Date	Changes	Originator
1.0	17/02/2016	Initial version	DWD
1.0 Revision 1	18/02/2016	Updated the Appendix G and I references	DWD
1.1	14/04/2016	Implemented RIDS from ESA review: RID_D.1.1_v1.1_001 (p14): Conclusions of impact analysis included in executive summary RID_D.1.1_v1.1_002 (p21): Phase 1 CMUG RB 2.0 instead of 1.6 RID_D.1.1_v1.1_003 (p22): GCOS-143 instead of GCO-128 RID_D.1.1_v1.1_004 (p25): 7th instead of 6th CCI Collocation meeting RID_D.1.1_v1.1_005 (p115): "Ice Sheets Analysis" processor instead of "XYZ" processor RID_D.1.1_v1.1_006 (throughout): Page headers modified: Issue 1.1 Acceptance by ESA	DWD
1.2	23/05/2016	Included new Use Case from Questionnaire Feedback	DWD
	23/05/2016	Changed the word “processor” to “operation”	DWD
	01/06/2016	Included new CCI Toolbox logo on front page	DWD
	02/06/2016	Included feedback from User Requirements Questionnaire and updated User Requirements Evolution; renamed “Use Cases Responses List” to “User Requirements Evolution”; see Appendix D	DWD
	07/06/2016	Adaption of Exemplary Use Case Workflows with respect to the way in which the toolbox operations are specified	DWD

		Update of Requirements Traceability Matrix regarding new insights from the updated Workflows	
	23/06/2016	Added new TBD item regarding “Ice Sheets Analysis”	DWD
	29/06/2016	Update Table 3.4	DWD
	29/06/2016	Submission to ESA	DWD
2.0	21/07/2016	Modification of CCIT-UR-DM0013 regarding new terminology	DWD
	03/08/2016	Replacing of logo	DWD
	03/08/2016	Update of CCIT-UR-PM0009: inclusion of option to save figure as PDF	DWD
	05/08/2016	Update of Use Cases regarding data specification	DWD
	05/08/2016	Update of Workflows: a) modification to method agnostic workflows (not GUI-specific e.g. “the user clicks a button to execute the Operation” but more general “the user executes the Operation”) b) update regarding data specification c) correction of errors e.g. no derivation of snow cover, NDVI from LC (no continuous data)	DWD
	05/08/2018	Update of Requirements Traceability Matrix	DWD
	14/09/2016	Replacing of Operations “Temporal Filtering” and “Spatial Filtering” by “Temporal Subsetting” and “Spatial Subsetting” as well as the Operation Category “Filtering and Selections” by “Subsetting and Selections” in the Use Case workflows	DWD
	14/09/2016	Inclusion of chapter on terminology (including 2 new reference documents)	DWD

	23/09/2016	Inclusion of modified versions of Use Cases involving CCI Glaciers (UC #3, 5, 7, 8) → changes concerning feasibility	DWD
	23/09/2016	Update of CCIT-UR-LM0044: inclusion i) Conversion between raster and vector formats j) Buffering	DWD
	26/09/2016	Removal of the redundant step of spatial subsetting a region for Niño 3.4 index calculation in UC6 workflow	DWD
	21/10/2016	Inclusion of new requirements: CCIT-UR-GUI0018 The GUI shall include a timeline to drag in order to change the point in time for which data is displayed. CCIT-UR-GUI0019 The GUI shall include the possibility to click on a location on the globe / on a map to show time series of the data assigned to the spatial point. CCIT-UR-LM0051 The CCI Toolbox should include a functionality to perform end-to-end use cases as one single operation. CCIT-UR-LM0052 For easy but reasonable anomaly calculation and other climatological purposes the CCI Toolbox should supply default climatologies. For this, a minimum time span of 30 years is aimed at. When jointly using multiple data products, the maximum common time span has to be taken into account.	DWD
	21/10/2016	Reingestion of CCIT-UR-DM0011 b: non-ESA data Removal of CCIT-UR-DM0012 I and CCIT-UR-PN0009i: shape (duplicate)	DWD
	21/10/2016	Update of Requirements Traceability Matrix	DWD
	21/10/2016	Update of distribution list: added Chris Bernat	DWD

	21/10/2016	Modification of UC11 workflow: reprojection instead of coregistration	DWD
3.0	11/11/2016	Inclusion of gap filling in UC11 exemplary workflow	DWD
	11/11/2016	Splitting up calculation of “absolute anomalies of log transformed SM data” by Operation “Arithmetics” into • calculation of “log transformation of SM data” by Operation “Arithmetics” • calculation of “absolute anomalies of log transformed SM data” with respect to mean of reference period by Operation “Anomalies” in UC6 workflow	DWD
	21/12/2016	Update of terminology diagram (typo) Figure 1-1	DWD
	21/12/2016	Modification of CCIT-UR-LM0052 into: For easy but reasonable anomaly calculation and other climatological purposes the CCI Toolbox should supply a tool for the creation of reference values by calculating long term averages.	DWD
	22/12/2016	Inclusion of operation “Long-term average” in UC6 workflow	DWD
4.0	14/03/2018	Inclusion of Additional User Requirements during Iteration 7 as new subchapter 5.15	DWD
	14/03/2018	Inclusion of de-scoped requirements due to reassessments of the requirements in Iteration 7 , done by the Champion Users..	DWD
5.0	14/06/2018	Revision of the Required Toolbox Features of UC3, 5, 7, 8	DWD/UZH
	14/06/2018	Revision of the Exemplary Workflow descriptions of UC3, 5, 7, 8	DWD/UZH
5.1	15/06/2018	Added Table 4-2 Use Cases suitable for	DWD

		education purposes	
5.1	15/06/2018	Inclusion of UC19a as educational UC	DWD

Distribution List

Name	Affiliation
Ed Pechorro	ESA
Simon Pinnock	ESA
Carsten Brockmann	Brockmann Consult
Norman Fomferra	Brockmann Consult
Hans Permana	Brockmann Consult
Anna Corlyon	Telespazio VEGA UK
Helen Clifton	Telespazio VEGA UK
Paolo Pesciullesi	Telespazio VEGA UK
Janis Gailis	S&T
Kenneth Hauglund	S&T
Rainer Hollmann	DWD
Nathalie Selbach	DWD
Vivien Priemer	DWD
Chris Merchant	University of Reading
Kevin Pearson	University of Reading
Frank Paul	University of Zurich

Table of Contents

List of Tables

1 Introduction

1.1 Purpose and Scope of the Document

This document compiles the user requirements for different applications areas of CCI Toolbox developed in ESA and provides the user input. This will be the basis to derive the software specification and to assess how well the toolbox software will meet these requirements.

The CCI Toolbox implementation plan will be based on the idea to implement one or more complete use cases within up to ten subsequent 3-months periods (iterations). This document is supposed to serve as a guide and a reservoir of requirements and featured, meaning that it is neither not intended to implement necessarily all listed Use Cases nor to implement them exactly in the way they are presented. Additionally, it is planned to update this document on a regular basis after each iteration to document upcoming extended and new user requirements of the different application areas.

1.2 Structure of the Document

This document summarises the requirements for CCI Toolbox to support the exploitation and use of the CCI data set. CCI Toolbox will provide an easy-to-use tool for several broadly defined application areas as delineated in section 3. A collection of relevant Use Cases for the application areas is shown in section 4. This is followed by section 5 detailing the derived user requirements for CCI Toolbox and the traceability matrix shown in section 6. An impact analysis of state-of-the-art climate tools regarding use cases and requirements gathered in this document is presented in section 7.

1.3 Reference Documents

[RD-1] WCRP Grand Challenges. URL: http://www.wcrp-climate.org/index.php/about-implementation/119-implementation-gc.

[RD-2] IPCC (2013): Summary for Policymakers. In: Climate Change 2013: The Physical Science Basis. Contribution of Working Group I to the Fifth Assessment Report of the Intergovernmental Panel on Climate Change [Stocker, T.F., D. Qin, G.-K. Plattner, M. Tignor, S.K. Allen, J. Boschung, A. Nauels, Y. Xia, V. Bex and P.M. Midgley (eds.)]. Cambridge University Press, Cambridge, United Kingdom and New York, NY, USA.

[RD-3] Freedmann, A. (2012): US heatwave may have been made more likely by global warming. The Guardian, 2012-03-28.

[RD-4] Ashok, K., Guan, Z.Y., and Yamagata, T. (2001): Impact of the Indian Ocean Dipole on the relationship between the Indian monsoon rainfall and ENSO. Geophysical Research Lettters, 28, 4499–4502.

[RD-5] Wolter, K., and Timlin, M.S. (1993): Monitoring ENSO in COADS with a seasonally adjusted principal component index. Proceedings of the 17th Climate Diagnostics

Workshop, Norman, OK, NOAA/NMC/CAC, NSSL, Oklahoma Climate Survey, CIMMS and the School of Meteorology, University of Oklahoma, 52–57.

[RD-6] Wolter, K., and Timlin, M.S. (1998): Measuring the strength of ENSO events - how does 1997/98 rank?. Weather, 53, 315–324.

[RD-7] R statistical computing. URL: http://www.r-project.org/.

[RD-8] Python. URL: https://www.python.org/.

[RD-9] M. Dowell, P. Lecomte, R. Husband, J. Schulz, T. Mohr, Y. Tahara, R. Eckman, E. Lindstrom, C. Wooldridge, S. Hilding, J.Bates, B. Ryan, J. Lafeuille, and S. Bojinski (2013): Strategy Towards an Architecture for Climate Monitoring from Space. Available from: www.ceos.org; www.wmo.int/sat; http://www.cgms-info.org/

[RD-10] WGClimate (CEOS/CGMS Working Group on Climate) (2016): ECV Inventory Questionnaire Guide. Version 2.4. Reference ECO-WGCL-EOPS-TN-16-0022.

1.4 Applicable Documents

[AD-1] CCI Toolbox: Statement of Work. ESA Climate Office, 2015. (CCI-PRGM-EOPS-SW-14-0031)

[AD-2] CCI Toolbox Proposal for ESA ESRIN. Brockmann Consult, 2015. (AO/1-8193/157I-NB)

[AD-3] CCI Toolbox URD Appendix I – State of the Art Analysis, Feb 2016.

[AD-4] CCI_Toolbox_Requirements_Tracking_sheet_V1.4_18062018.xlsx

1.5 Terminology

In order to avoid confusion and ambiguity, a common terminology was agreed on as listed in Table 1-1. It is partially based on [RD-9] and [RD-10] and is to be used in all parts of the CCI Toolbox project from the user-sided activities to the software development. The concept regarding the naming of data is also illustrated in Figure 1-1.

Table 1-1: CCI Toolbox Terminology

Term	CCI Toolbox Definition
ECV	Umbrella term for →geophysical quantity/quantities associated with climate variation and change as well as the impact of climate change onto Earth (e.g. cloud properties).

ECV Product	Subdivision of →ECVs in long-term data record of values or fields, covering one or more →geophysical quantities (e.g. Cloud Water Path).
Geophysical Quantity	One physical parameter/variable in that constitutes a time series of observations (e.g. Cloud Liquid Water Path).
Dataset	In-memory representation of data read from a →data source. Contains multiple layers of a →geophysical quantity or multiple →geophysical quantities with multiple layers encompassing e.g. information on temporal and spatial dimensions and localization or uncertainty information.
Data product	Combination of →dataset and →geophysical quantity incl. uncertainty information (e.g. Cloud Liquid Water Path from L3S Modis merged phase1 v1.0 including uncertainty, standard deviation, number of observations, …)
Schema	Describes a →dataset's structure, contents and data types.
Data store	Offers multiple →data sources.
Data source	A concrete source for →datasets. Has a →schema and knows about dataset coverage. Used to load →datasets.

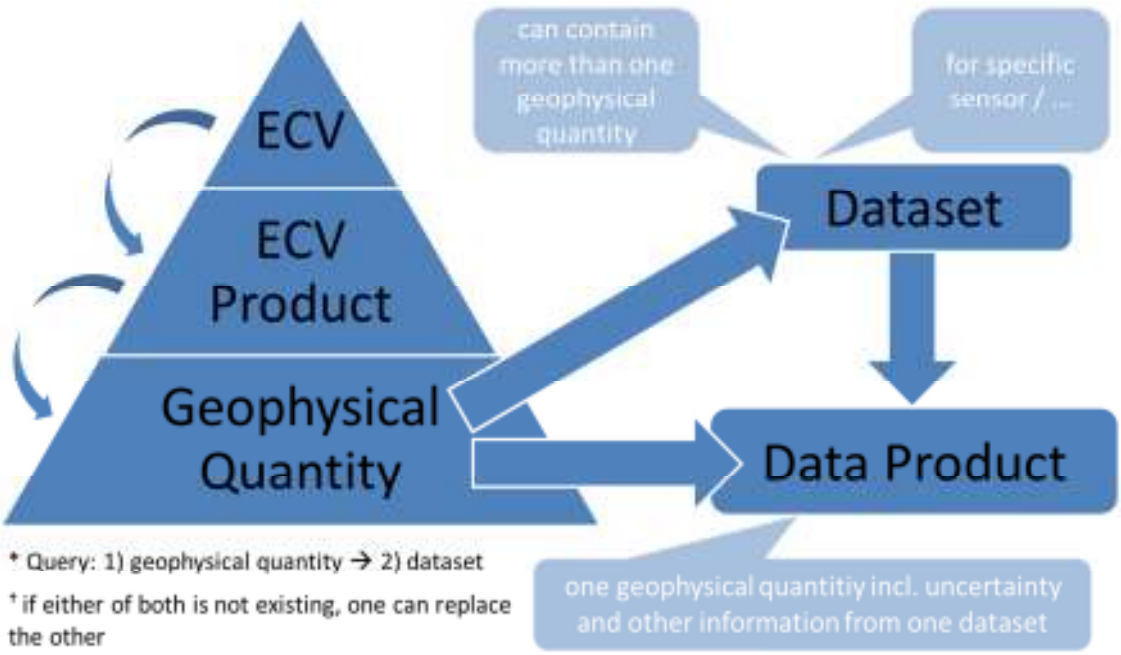

Figure 1-1: Illustration of the CCI Toolbox Terminology.

1.6 Acronyms

A	Aerosol
API	Application Programming Interface
BC	Brockmann Consult
CCI	Climate Change Initiative
CDM	Common Data Model
C4MIP	Coupled Carbon Cycle Climate Intercomparison Project
CEOS	Committee on Earth Observation Satellites
CFL	Calving Front Location
CLI	Command Line Interface
CMIP	Coupled Model Intercomparison Project
CMUG	Climate Modelling User Group
COP	Conference of the Parties
CRG	Climate Research Group
DEM	Digital Elevation Model
DWD	Deutscher Wetterdienst
ECV	Essential Climate Variable
ENSO	El Niño-Southern Oscillation
F	Fire
FOEN	Federal Office of Environment
G	Glaciers
GHG	Greenhouse Gases
GI	Greenland Ice Sheet
GLIMS	Global Land Ice Measurements from Space
GMB	Gravitational Mass Balance
GUI	Graphical User Interface
I	Ice Sheets
IGBP	International Geosphere-Biosphere Programme
IPCC	Intergovernmental Panel on Climate Change
IV	Ice Velocity
KO	Kick-Off
LC	Land Cover

MEI	Multivariate ENSO Index
NAO	North Atlantic Oscillation
OTS	Off The Shelf
OC	Ocean Colour
QC	Quality Control
RBD	Requirements Baseline Document
RGI	Randolph Glacier Inventory
S&T	Software & Technology
SEC	Surface Elevation Change
SI	Sea Ice
SLF	Institute for Snow and Avalanche Research Switzerland
SM	Soil Moisture
SoW	Statement of Work
SST	Sea Surface Temperature
TS	Technical Specifications
TVUK	Telespazio VEGA UK Ltd
UC	Use Case
UNFCCC	United Nations Framework-Convention on Climate Change
UoR	University of Reading
URD	User Requirements Document
UZH	University of Zurich
WCRP	World Climate Research Programme
WGMS	World Glacier Monitoring Service

2 Executive Summary

In this document, the user requirements for the ESA CCI Toolbox are compiled by the examination of Use Cases and Source Documents like the SoW and the URDs of the CCI projects.

The Use Cases span different user groups from non-expert users (knowledgeable public, undergraduate and postgraduate students) to expert users (climate service developers and providers, international bodies) to high-level expert users (international climate research community, earth system science community, earth system reanalysis community). Therefore, also the requirements reflect different application areas and levels. The requirements are subdivided into the following categories:

- Cardinal
- Architecture
- Command Line
- Graphical User Interface
- Documentation, Help, Support and Feedback
- Extensibility
- Data Module
- Logic Module
- Presentation Module
- Deployment
- Hardware and Operating System
- Performance

The obtained requirements will be the basis to derive the software specification. It is planned to update this document on a regular basis to document upcoming extended and new user requirements of the different application areas (e.g. based on feedback from CCI colocation events, conferences and user surveys).

Additionally, a State of the Art as well as an Impact Analysis are conducted, resulting in a list of components and libraries as well as design drivers, which shall be considered during the preparation of the technical specification of the CCI Toolbox. Optional extensions and supportive tools are also named. From the analysis, a front end based on web technologies in combination with electron is recommended as well as a back end implementation in Python with extensive use of popular libraries and APIs.

3 Methodology

3.1 Application Areas and Categorisation of Users

Across the CCI programme, each individual project details all user requirements (either technical or scientifically) in its respective user requirements document. From the scientific point of view they mostly refer and adhere to the GCOS satellite supplement.

For the CCI Toolbox the user requirements are broader and more cross-cutting than for the individual CCI projects. Also the envisaged users of the CCI Toolbox are users of any or all of the CCI data sets,

which are supported by the tools and software from CCI Toolbox. Already in the SoW [AD-1], an initial list of different typical user classes is given which will be addressed by CCI Toolbox.

Table 3-1 lists these different classes and the anticipated application area that is covered by the respective class.

Table 3-1: List of User Communities for CCI Toolbox as given in the SoW.

Nr	User Community	Description of application area
1	International climate research community	Contributing to IPCC scientific assessments, including climate model development, verification and data-assimilation, and scientists performing research on climate change monitoring, detection, attribution and mitigation. This includes (but is not limited to) the CCI Climate Modelling User Group (CMUG) and the Climate Research Groups (CRG) within each CCI ECV project.
2	Earth system science community	Working at a higher level than individual climate indictors, interested in Earth processes, interactions and feedbacks involving a fusion of theory, observations and models to which ECVs can play a role. This community includes, but is not exclusive to, those interested in WCRP grand challenges [RD-1], climate system integrative approaches, major science themes, global change and socio-economic impact of climate change. Example potential users include the International Geosphere-Biosphere Programme (IGBP), dynamic global vegetation modellers, the Coupled Model Intercomparison Project (CMIP), and the Coupled Carbon Cycle Climate Intercomparison Project (C4MIP).
3	Climate service developers and providers	For use in the development and provision of climate services. The provision of climate services is outside the scope of the CCI programme, nevertheless the Agency aims to proactively support parties involved in the development and provision of such services
4	Earth system reanalysis community	For use in reanalysis model development, verification and data-assimilation
5	International bodies	Responsible for climate change policy making and coordination of climate change measurement, mitigation and adaptation efforts, including UNFCCC, CEOS, IPCC, and COP participants.
6	Undergraduate and postgraduate students	Academic interest in climate change. Sustained and dedicated actions to generate and disseminate a substantial volume of effective communication and educational materials on the specific subject of Earth Observation and Climate Change to a wider audience are required by the Agency. The CCI Toolbox shall support this endeavour.

Nr	User Community	Description of application area
7	Knowledgeable public	Access and interaction to the latest scientific data on climate change.

These user communities, their areas of activities and their requirements are discussed in the following paragraphs:

3.1.1 International Climate Research Community Contributing to IPCC Scientific Assessments

This user community is composed of high-level expert users, working in the field of climate. They have already a lot of experience in using satellite data in several data formats and do understand very well the constraints of satellite data. This community knows also very well the terminology. It is expected that they will apply CCI data for various climate research activities. Most of the members of the climate research teams of the CCI projects can be regarded to belong to this community. It can be expected that this user community needs tools, which are applicable and performant enough **to investigate simultaneously multiple complete time series of CCI data** sets. In addition, this community is experienced enough and highly interested in making a lot of own choices using the CCI Toolbox (e.g. using different methods of spatial aggregation).

Typical applications include:

- to verify and improve climate models
- to monitor and analyse the state of the climate, to detect trends and to extract or distil this information for mitigation strategies

3.1.2 Earth System Science Community

This user community is composed of high-level expert users as well, working in the field of climate. They have already a lot of experience in using satellite data. Again, this community knows very well the terminology. This user community will take into account CCI data for general considerations to assess the global climate system and to investigate climate processes and feedback mechanisms. Their applications cover various climate research activities. The earth science system user community expects a clear and simple access to CCI data and need a **synopsis of climate information**. It can be expected that this user group needs tools which are applicable and **performant enough to investigate multiple complete time series of CCI data** sets. Similarly to the first user community, this community is experienced enough to make a lot of own choices using the CCI Toolbox.

3.1.3 Climate Service Developers and Providers

This user community is composed of expert users, working in the field of climate. In general, they do not necessarily have a lot of experience in using satellite data as they are coming from the surface observation side (e.g. working in national governmental agencies being responsible for climate

service applications). For their activities and applications, the CCI data provides an important independent data source using not only data based on satellite but also from in-situ observations.

In this growing application area, it can be thought that this community will use CCI data sets to develop own downstream products and/or improve existing climate services. The climate service community will especially benefit from inter-comparison tools taking into account external (own) data sources using the CCI developed data sets as established reference.

The clear additional need for this user community is the **repeatable exercises to be performed in regular intervals**. Thus, these users wish to save their selection criteria for future re-use. Further, one it is expected that this user community would like to **embed the CCI tools into their own operational procedures**.

3.1.4 Earth System Reanalysis Community

The users in this community are coming from (main) modelling centres, being high-level expert users, and working in the field of climate. They have already a lot of experience in using satellite data (e.g. in several data formats). Again, this community knows also very well the terminology. In summary, this user community overlaps partly with the first and second user communities and in this sense the user requirements on the CCI toolbox are similar to them, but with a shift in the application from regional towards the global scale modelling and in the re-analyses. **In this application area the user community will need access tools to inter-compare and make use of the available error information**. For this, the CCI Toolbox needs to **address and process the meta** data provided by CCI projects and to deal with them in a coherent way in case of multiple data sets.

3.1.5 International Bodies

The users for this application area are expert users, working in the field of climate, but do not necessarily have a lot of experience in using satellite data neither would they like to deal with all details involved. This user community depends on bundled information as e.g. included in climate information bulletins or higher-level synopsis. The requirements regarding data access are comparable with the user from application area #2, but on a higher level of integration. **A quick, user-friendly and easy as well as condensed access to CCI data is expected by this user community**.

3.1.6 Undergraduate and Postgraduate Students

Users in this application area are very diverse and they depend on the individual schemes of their university and educational schemes. As students they are starting to become expert level users. In general, they do not have too much experience in using satellite data and partly not familiar with the terminology. However, depending on the individual development their expertise is growing rapidly. They can be quite skilled in (scientific) programming.

Thus, they need special information to assess and investigate dedicated topics on one hand and to get general information on climate on the other side. In summary, this user community has very different requirements in terms of the CCI Toolbox, which are comparable with the first four user communities and most likely beyond. It can be expected that this user community will not perform

exercises and application to the full data series (due to time constraints in exams, lectures etc.) rather than **representative and illustrative subsets**. This diverse spectrum of requirements needs to be addressed via **multiple selectable elements in the CCI Toolbox**.

3.1.7 Knowledgeable Public

This user community is interested in getting easily understandable information with an easy, user-friendly access to the data of interest. This user community is composed of non-expert users, mostly not at all working in the field of climate. In general, they **do not have any experience in using satellite data** and are **not familiar with the terminology**. This leads to the important need to use a publically common understandable language, e.g. in the user interface layer of the toolbox. In addition, it can be expected that they take 'default' scenarios without too many options.

3.1.8 Summary of Application Areas and Users

Based on the initial analysis in section 3.1, it is thus possible to further group the users of these application areas into three high-level "user levels", who have common characterising attributes and common requirements:

- Non-expert user
- Expert user
- High-level expert user

as shown in Table 3-2. This helps CCI Toolbox to select and, (re-) use the most suitable tools and elements during the development to deliver user-oriented solutions for all user communities. It is expected that the difference in the characterisation of user as given in Table 3-2 will lead to the use of different vocabulary/terminology.

Table 3-2: Initial Characterisation of Users.

User Level	Characterisation	General Requirements	User Community	Specific Requirements
High-level expert user	• Working in field of climate research • Experience in using satellite data • Knows terminology • Will apply CCI data for various climate research applications	• Working on full time series across different data • Intercompare different CCI and other climate data; using the error information • Exploit meta data to fully understand CCI data and use them correctly • High performance computing • Tools need to be highly configurable to adapt to exactly their needs	1 - International climate research community contributing to IPCC scientific assessments	• Using tools for verification and improving climate models • Using tools to monitor climate, to detect trends and to develop mitigation strategies
			2 - Earth system science community	• Using CCI Data for general considerations to assess global climate system and its feedback mechanisms • Need a synopsis of climate information
			4 - Earth system reanalysis community	• Need CCI data for regional to global scale modelling and in the re-analyses • Strong need for error characterisation
Expert user	• Working in the field of climate • Not necessarily experienced with satellite data	• Need ambitious tools but with good defaults rather than too many options	3 - Climate service developers and providers	• Coming from the thematic field of surface observation • Consider CCI data as an important complementary data set • CCI data needed for developing new downstream services or to improve existing ones • Will benefit from tools to intercompare CCI data with own, already used, data
			5 - International Bodies	• Need "bundles", i.e. integrated information, such as climate information

User Level	Characterisation	General Requirements	User Community	Specific Requirements
				bulletin or higher level synopsis • Require easy access and understanding of data (products) • Require quick, user friendly and easy access to CCI data
Non-expert user	• Diverse set of users from many different application areas • No or little experience with climate data in general, and CCI data specifically • Not experienced with satellite remote sensing or CCI terminology	• Data requirements are on selected topics rather than full mission, multi-CCI data sets • Tool requirements are EASY and UNDERSTANDABLE. Technically: data access, clear guidance on choice of tools, smart (good, depending on context) defaults; help & tutorials	6 - Undergraduate and postgraduate students	• Available skills (thematic subject, programming) as well as interest depend on the educational scheme of their respective university • Future expert user; expertise will grow when working with the CCI toolbox, i.e. it should not only provide beginner's level functions but also higher level • Need specific information to assess and investigate dedicated topics on one hand and to get general information on climate on the other side • Need examples and demonstrations; data & corresponding tools in order to study certain mechanisms, such as El Niño • Toolbox should provide alternative way to choose from (e.g. for interpolation) in order to learn from; not too complicated • Educational material is required; could be elaborated rather than too simplistic
			7 - Knowledgeable public	• Need easy understandable data • Need easy access mechanisms; user friendly interface • Need an understandable language, avoiding technical terminology

User Level	Characterisation	General Requirements	User Community	Specific Requirements
				• Need tools that can be used without knowing too much about it, i.e. no/few options; good/smart defaults; good help • Require demonstrations of tools (videos), short and simple

3.2 Source Documents

The Statement of Work [AD-1] identifies a number of documents to be considered in the generation of the user requirements for the CCI Toolbox. For this URD issue, a subset of these documents is focussed. Furthermore, some more documents were included. The documents assessed in the generation of this URD are listed in Table 3-3.

Table 3-3: Source Documents Analysed for the Definition of User Requirements (SoW Task 1).

Document	Doc Ref	Issue	Issue Date
CCI Toolbox: Statement of Work	CCI-PRGM-EOPS-SW-14-0031	1.1	06/02/2015
Phase I CMUG Requirement Baseline Document	D1.2	2.0	17/12/2012
CMUG Requirements Baseline Document	D1.1	0.6	April 2015
CMUG Technical Note on Analysis of how the CCI datasets will meet climate modellers needs	D2.4	1.2	06/10/2011
CCI Data Policy	CCI-PRGM-EOPS-TN-13-0019	1.1	12/07/2013
Data Standards Requirements for CCI Data Producers	CCI-PRGM-EOPS-TN-13-0009	1.1 1.2	24/05/2013 09/03/2015
Aerosol CCI URD	Aerosol_cci_URD_v2.6	2.6	23/09/2015
Cloud CCI URD	Cloud_CCI_D1.1_URD_ 2.0_submitted	2.0	30/06/2014
Fire CCI URD	Fire_cci_Ph1_JUELICH_ D1_1_URD_v3_5	3.5	24/09/2011
Phase 1 Glaciers CCI URD	Glaciers_cci-D1.1-URD	1.1	11/10/2011
Glaciers CCI URD	Glaciers_cci-D1.1-URD-Ph2Yr1	0.4	17/10/2014
Land Cover CCI URD	LAND_COVER_CCI_URD_2.2	2.2	22/02/2011
Ice Sheets CCI URD	ST-DTU-ESA-ISCCI-URD-001	1.5	03/08/2012
Antarctic Ice Sheet URD	ST-UL-ESA-AISCCI-URD-001	1.1	11/09/2015

Document	Doc Ref	Issue	Issue Date
Greenland Ice Sheet URD	ST-DTU-ESA-GISCCI-URD-001	2.2	28/12/2015
Ocean Colour CCI URD	D1.1	3.0	25/09/2015
Ozone CCI URD	Ozone_cci_URD_2.1	2.1	21/11/2011
Sea Ice CCI URD	SICCI-URD-01-12	1.0	01/06/2012
Sea Level CCI URD	SLCCI-URD-004	1.6	22/10/2014
SST CCI URD	SST_CCI-URD-UKMO-001	2.0	30/11/2010
Soil Moisture CCI URD	D1.1	2.0	17/09/2013
GCOS Guideline for the Generation of Datasets and Products meeting GCOS Requirements	GCOS-143 (WMO/TD No. 1530)	-	05/2010
CCI System Requirements	CCI-PRGM-EOPS- TN-12-0031	1.0	02/07/2013
CCI open data portal: Requirements Baseline document	cdap.rep.007	1.1	05/11/2015
WMO: Satellites for Climate Services. Case studies for establishing an architecture for climate monitoring from space	WMO-No.1162	-	2015
Sentinel-3 Toolbox Development. Requirements Baseline for the Sentinel-3 Toolbox	-	1.0	26/05/2014
CCI project deliverables including climate assessment reports			
Output from CCI Colocation meetings			
Output from CCI CMUG Integration meetings			

3.3 State of the Art Analyses

[AD-3] is the external Appendix I to this document and provides an analysis on the state of the art in climate tooling. It is not meant to be a complete set, as there are by far too many software tools to be visited in the scientific/climate domain. Instead, it is focused on a selection of

- Tools which were already indicated by the SoW [AD-1] and tools;
- Tools that have been pointed out by earth observation scientists and potential CCI Toolbox users;
- Tools that seem important from the experience of the project team.

The goal of the analysis provided in [AD-3] is to assess as to what extent the currently existing climate tooling already meets the user requirements and which technology is most suitable for the implementation of the CCI Toolbox. The result of this assessment is a list of tools having an impact on the CCI Toolbox development and a recommendation for the implementation technologies to be used. The conclusions drawn from the impact analysis combined with the outcome of the following chapters are given in section 7.

3.4 User Requirements Generation

The user requirements are sub-divided into categories obtained from the SoW. The requirements are identified with the following conventions:

CCIT-UR-*<label>nnnn*

- *<label> stands for*
    - CR: Cardinal Requirements
    - A: Architecture Requirements
    - CL: Command Line Requirements
    - GUI: Graphical User Interface Requirements
    - D: Documentation, Help, Support and Feedback Requirements *(not included in SoW)*
    - E: Extensibility Requirements
    - C: Control Requirements
    - DM: Data Module Requirements (functional)
    - LM: Logic Module Requirements (functional)
    - PM: Presentation Module Requirements (functional)
    - De: Deployment Requirements

- HS: Hardware and Operating System Requirements
- P: Performance Requirements
- AF: Additional Functionality Requirements *(not included in SoW)*
- *Present in the SoW but not included in the URD*
  - *Da: Data Requirements*
  - *O: Operations Requirements*
  - *S: Security Requirements*

- *nnnn* stands for a number unique to a specific requirement of one group (for every attribute group the count starts with zero again)

Additionally, sub-requirements are labelled with lower case letters. In doing so, they are listed in the context of the higher-level requirement but treated individually. Every sub-requirement can therefore be prioritised and considered on its own and can be discarded or retained independently from the particular higher-level requirement as well as other sub-requirements.

Some requirements are derived directly from Source Documents without being part of specific Use Cases. For traceability purposes, the following terminology applies for them. These numbers do not substitute the actual CCI Toolbox user requirements labels (see above).

- SWR-<*originallabel*>
  - Requirements pointed out in the CCI Toolbox Statement of Work [AD-1] (see Appendix A
  - <*originallabel*> stands for the numbering used in the SoW.
  - SWRs without numbers indicate URs which where mentioned but not labelled as requirements in the SoW.
- OPR-<*label*>
  - Requirements forming part of the CCI Open Data Portal RBD Optional User Requirements Relating to Tools (see Appendix B).
  - <label> stands for the numbering used in the CCI open data portal URD, leaving out the (always same) prefix “CCIP-XR-DA-“.
  - OPRs without numbers indicate URs which where mentioned but not labelled as requirements in the Open Data Portal RBD.

- PUR-<*project*>
  - Requirements obtained from the CCI project URDs.
  - <*project*> stands for the particular CCI project (here: Aerosol (A), Fire (F), Glaciers (G), Greenland Ice Sheet (GI), Ice Sheets (I), Land Cover (LC), Ocean Colour (OC), Soil Moisture (SM), Sea Ice (SI), Sea Surface Temperature (SST)), counts are spared.

- CMUG-*<label>*
  - Requirements obtained from the CMUG RBD.
  - Counts are spared as no numbering is performed in the CMUG RBD.
- S3RB-*<label>*
  - Requirements obtained from the requirements and options listed in the Sentinel-3 Toolbox RBD.
  - Counts are spared as not all requirements are numbered in the Sentinel-3 Toolbox RBD.

3.5 User Requirements Evolution

Gathering the user requirements is initially based on the assessment of Use Cases and the examination of Source Documents like the SoW and URDs of the CCI projects. It is planned to update the requirements on a regular basis e.g. based on feedback from CCI colocation events, conferences and user surveys (see Table 3-4). In this context, Appendix C shows the template used for the UC generation and Appendix D comprises a list of responses.

Table 3-4: Exemplary List of Expected Feedback.

Date	Origin of expected Input	Status
01/05/2016	PM1, CCI-CMUG 6th Integration Meeting, DWD Internal User Workshop	Done; feedback received and integrated in Appendix D
01/08/2016	Living Planet Symposium 2016	Feedback received and integrated in Appendix D
	PM2	Planned
01/11/2016	IRM2	Planned
	7th CCI Colocation Meeting	Planned

Additionally, each of the Champion Users – Deutscher Wetterdienst (DWD), University of Reading (UoR) and University of Zürich (UZH) – has expertise in certain application areas as outlined in Table 3-5. All Champion Users will collect and adjust the user requirements of that area.

Table 3-5: Expertise of the Champion Users.

Type of application area	Champion User		
	DWD	UZH	UoR
1 - International climate research community	X	X	
2 - Earth system science community	(X)	X	
3 - Climate service developers and providers	X		
4 - Earth system reanalysis community	X		
5 - International bodies	X	X	
6 - Undergraduate and postgraduate students		X	X
7 - Knowledgeable public	X	X	

3.6 Use Cases Numbering

The Use Cases covered in this document have different origins. Therefore, they are classified as follows:

- CCIT-SWR-UC-nn: Use Cases treated in the Statement of Work [AD-1].
- CCIT-SD-UC-nn: Use Cases obtained through the analysis of the Source Documents (see 3.2).
- CCIT-CU-UC-nn: Use Cases prepared by the Champion Users.
- CCIT-WS-UC-nn: Use Cases derived from workshops, surveys and interviews.

4 Use Cases

This section provides Use Cases that show exemplarily how the different user communities (

Table 3-1) would like to work with the toolbox. These Use Cases provide application scenarios and requirements along which it will be demonstrated how the CCI Toolbox can be developed. In Table 4-1, the Use Cases are mapped to the respective user groups and scientific levels.

Use Cases are defined at User Level, i.e. applicable for one or more user communities. Each Use Case is driven by a problem definition, which is given in the beginning and which addresses a typical question. This is followed by the required toolbox features and a sequence of single steps, how a user

is expecting to work with the CCI Toolbox. Notes are added highlighting specific further aspects of the Use Case.

Table 4-1: Use Cases assigned to User Groups and Levels.

User Level	User community	Use Cases
High-level expert user	**1 - International climate research community**	UC 1, UC 3, UC 9, UC 10, UC 20
High-level expert user	**2 - Earth system science community**	UC 3, UC 9, UC 10, UC 21
Expert user	**3 - Climate service developers and providers**	UC 4, UC 7, UC 12–17
High-level expert user	**4 - Earth system reanalysis community**	UC 3
Expert user	**5 - International bodies**	UC 1, UC 8, UC 13–17
Expert user/non-expert user	**6 - Undergraduate and postgraduate students**	UC 5, UC 6, UC 11, UC 18
Non-expert user	**7 - Knowledgeable public**	UC 2, UC 4, UC 19, UC 19a

Table 4-2 Use Cases suitable for education purposes

	Use Cases
Educational	UC 2, UC 9, UC 19, UC 19a

The CCI Toolbox champion users compiled a set of Use Cases based on a template developed by the project team and input from Source Documents which is shown in Table 4-3.

In the next subsection only a short summary per Use Case is given. Exemplary workflows for the individual use cases are presented in Appendix E as well as an estimation of their timeliness in Appendix F.

Table 4-3: Use Cases for CCI Toolbox.

UC #	Label	Title of Use Cases
1	**CCIT-CU-UC-01**	IPCC Support [AD-2]
2	**CCIT-CU-UC-02**	School Seminar Climate and Weather [AD-2]
3	**CCIT-CU-UC-03**	Glaciers and Sea Level Rise [AD-2]
4	**CCIT-CU-UC-04**	Extreme Weather Climate Service [AD-2]
5	**CCIT-CU-UC-05**	School Seminar Glacier [AD-2]
6	**CCIT-CU-UC-06**	Teleconnection Explorer [AD-2]
7	**CCIT-CU-UC-07**	Regional Cryosphere Climate Service [AD-2]
8	**CCIT-CU-UC-08**	World Glacier Monitoring Service [AD-2]
9	**CCIT-SWR-UC-01**	Relationships between Aerosol and Cloud ECV (SoW #1 [AD-1])
10	**CCIT-SWR-UC-02**	Scientific Investigation of NAO Signature (SoW #2 [AD-1])
11	**CCIT-SWR-UC-03**	School Project on Arctic Climate Change (SoW #3 [AD-1])
12	**CCIT-SD-UC-01**	Marine Environmental Monitoring (WMO 2015)
13	**CCIT-SD-UC-02**	Drought Monitoring in Eastern Africa (WMO 2015)
14	**CCIT-SD-UC-03**	Drought Monitoring and Assessment in China (WMO 2015)
15	**CCIT-SD-UC-04**	Renewable Energy Resource Assessment with regard to Topography (WMO 2015)
16	**CCIT-SD-UC-05**	Monitoring Tropical Deforestation (WMO 2015)
17	**CCIT-SD-UC-06**	Stratospheric Ozone Monitoring and Assessment (WMO 2015)
18	**CCIT-CU-UC-09**	Examination of ENSO and its Impacts based on ESA CCI Data (contributed by champion users)
19	**CCIT-CU-UC-10**	GHG Concentrations over Europe (contributed by champion users)
19a	**CCIT-CU-UC-10a**	Ozone conzentration over the pole (contributed by champion users)

UC #	Label	Title of Use Cases
20	**CCIT-CU-UC-11**	Examination of North Eastern Atlantic SST Projections (contributed by champion users)
21	**CCIT-WS-UC-01**	Investigation of Relationships between Ice Sheet ECV Parameters (contributed by CCI Ice Sheets project team)
22	**CCIT-WS-UC-02**	Analysis of Equatorial Aerosol and Cloud Features using Hovmöller Diagrams (contributed by survey participant)

4.1 Use Case #1 IPCC Support

User Characteristics: User Level 1 High-level expert user (User Communities 1 international climate research community and 5 international bodies)

Problem Definition:

In its Summary for Policy Makers, the fifth IPCC Assessment Report [RD-2] shows four ECVs of the marine environment as indicators of a changing climate. This figure depicting the "(a) extent of Northern Hemisphere March-April (spring) average snow cover; (b) extent of Arctic July-August-September (summer) average sea ice; (c) change in global mean upper ocean (0–700 m) heat content aligned to 2006−2010, and relative to the mean of all datasets for 1970; (d) global mean sea level relative to the 1900–1905 mean of the longest running dataset, and with all datasets aligned to have the same value in 1993, the first year of satellite altimetry data" in the form of annual values with available uncertainties expressed as shadings, could also constitute a CCI Toolbox product. For a second figure, change in sea ice extent and ocean heat content are calculated on a regional basis and contrasted with land surface temperature anomalies. Additionally, global averages of land surface, land and ocean surface temperature, as well as ocean heat content changes are presented. All observational time series are compared with model output. This could have been a CCI Toolbox operation, too.

Required Toolbox Features Step 1:

- Access to and ingestion of multi ESA CCI ECV data (Sea Ice, SST and Sea Level)
- Access to and ingestion of other ECV sources (ESA GlobSnow)
- Tools to perform QC on input data (at least visual checking, consistency with historic time series)
- Resampling and aggregation to a common spatio-temporal grid including propagation of uncertainties
- Comparison of sea ice coverage from Sea Ice, OC and SST (this may require own operations)
- User programmed model to derive upper ocean heat content from SST
- Aggregation to global averages including uncertainty propagation

- Line plots as output, showing means and uncertainties

Additionally Required Toolbox Features Step 2:

- Access to and ingestion of further ESA data (LST from GlobTemperature) and model output (sea ice, upper ocean heat content, LST, NST)
- Band math or user programmed tool to combine SST and land surface temperature
- Spatial filtering to perform the analysis on a regional scale (e.g. using shape files)
- Ensemble statistics to show model ensemble mean and uncertainties in comparison to results based on (satellite) observations

4.2 Use Case #2 School Seminar Climate and Weather

User Characteristics: User Level 3 non-expert user (User Community 7 knowledgeable public), educational

Problem Definition:

As a school project, measurements of air temperature, precipitation, and wind speed from the school-run weather station shall be compared to long-term climate data in the form of ESA's CCI Cloud and Soil moisture climatological means. Finally, it shall be assessed if the measurements are within the climate means for the particular location.

Required Toolbox Features:

- Access to and ingestion of ESA CCI Cloud and Soil Moisture data
- Access to and ingestion of user supplied data (NST, PRE, wind speed); if required programming of an interface to a measurement device
- Extraction of cloud and soil moisture time series data corresponding to the location of the school
- Calculating the climatological means from the time series including propagation of uncertainties
- Filtering of the measurement data from the meteorological station: e.g. detection of outlier or gap filling (implemented in the toolbox or programmed by the students)
- Generation of a line plot showing the CCI and the meteorological station data.
- Optional: comparison of the climatology at the school location with those from other locations on earth: selection of other locations and comparing the climatologies in one graph (i.e. without meteorological station data from the other location)

Notes: This could also be a user visiting the website of a meteorological station and the website has included a widget that accesses the toolbox to perform the steps described.

4.3 Use Case #3 Glaciers and Sea Level Rise

User Characteristics: User Level 1 High-level expert user (User Communities 1 international climate research community, 2 earth system science community and 4 earth system reanalysis community)

Problem Definition:

A scientist wants to know: “What is the contribution of all glaciers to global sea level rise over a given time period in the future?”.

Required Toolbox Features:

- Access to and ingestion of global glacier extents (e.g. the Randolph Glacier Inventory, RGI)
- Access to and ingestion of all relevant in-situ measurements from the past (via WGMS)
- Spatial and temporal aggregation, and statistical analysis of input data (e.g. total glacier area of a selected sub-region from RGI, mean mass change (with standard deviation) from WGMS
- Plotting mass changes of individual glaciers as a function of time (per data and cumulative)
- Printing values (total area, specific mass change, total mass change) per aggregated region (e.g. country) and for different time periods

4.4 Use Case #4 Extreme Weather Climate Service

User Characteristics: User Level 2 expert user (User Community 3 climate service developers and providers, providing information for User Community 7 knowledgeable public)

Problem Definition:

In March 2012, the article “US heatwave may have been made more likely by global warming” by Andrew Freedman, senior science writer for Climate Central, was published in The Guardian [RD-3]. He wrote about extreme events, using the example of the increased occurrence of heat waves in March in relation to Greenhouse Gases. The article included a map of temperature anomalies over North America compared to the 2000–2001 reference period to illustrate this. Furthermore, several statements which require analysis of large data sets and time series were made. The CCI Data and CCI Toolbox could have supported this analysis.

Required Toolbox Features:

- Access to and ingestion of ESA CCI GHG data
- Access to and ingestion of ESA GlobTemperature data
- Geometric adjustments
- Spatial subsetting
- Computation of statistical quantities (mean of all month/season of a reference time series and percentiles)
- Computation of anomalies
- Map generation and with a simple colour coding to present a clear message

4.5 Use Case #5 School Seminar Glacier

User Characteristics: User Level 3 non-expert user (User Community 6 undergraduate and postgraduate students)

Problem Definition:

A student (at school) wants to know for a seminar paper: “What is the largest glacier in the world, and how has this glacier changed in the past compared to other glacierized regions?”.

Required Toolbox Features:

- Access to and ingestion of the Randolph Glacier Inventory (RGI; database with contributions of CCI Glaciers) via GLIMS homepage
- Sorting for size
- Selection, extraction and saving to disk of the data for the largest glacier
- Access to and ingestion of glacier fluctuation data, e.g. from World Glacier Monitoring Service (WGMS)
- Selection of length or mass changes
- Filtering of fluctuation data according to a selection based on reference data (here the RGI data), incl. values for the nearest glacier with data
- Extraction of a summary of global glacier fluctuations from WGMS data base
- Data comparison (statistical values, deviations, graphs, maps, animations) and export

4.6 Use Case #6 Teleconnection Explorer

User Characteristics: User Level 3 non-expert user (User Community 6 undergraduate and postgraduate students)

Problem Definition:

As part of a project on climatic teleconnection, a student investigates how El Niño-Southern Oscillation (ENSO) relates to monsoon rainfall. A result could be a plot showing the sliding correlation between Indian Summer Monsoon Rainfall (ISMR) and Niño3.4 SST anomalies [RD-4]. A more sophisticated version of this task would be to calculate the Multivariate ENSO Index (MEI, [RD-5], [RD-6]). Additionally, also the comparison of the ENSO index with other CCI datasets (e.g. Cloud, Fire) would be interesting.

Required Toolbox Features:

- Access to and ingestion of ESA CCI SST and Soil Moisture data
- Geometric adjustments

- Spatial (manually by drawing a polygon of the particular area) and temporal filtering and subsetting for both data sets
- Calculation of anomalies and statistical quantities
- Visual presentation of statistical results and time series
- ENSO index calculation from SST data (built-in function, user-supplied plug-in or CLI, API)
- Calculation of the absolute anomaly on the log transformed soil moisture data (this should be a standard function/operation provided by the toolbox)
- Calculation of the correlation between the two time series with a lag of 30 days
- Generation of a correlation map and export of the correlation data (format options) regarding the date range chosen
- Generation of a time series plot of the correlation by the selection of a location in South East Asia on the correlation map
- Saving of the image and the underlying data (format options)

In case of choosing the MEI instead of a solely SST-based index:

- Access to and ingestion of additional data for MEI (sea-level pressure (P), zonal (U) and meridional (V) components of the surface wind, sea surface temperature (S), surface air temperature (A), and total cloudiness fraction of the sky (C))
- Geometric adjustments
- Index calculation including EOF analysis (incorporated by built-in function, user-supplied plug-in or CLI, API)

Additional:

- Access to and ingestion of additional ESA CCI data (fire, clouds, ocean colour, sea ice)
- Geometric adjustments
- Spatial and temporal filtering
- Calculation of statistic quantities and correlations
- Generation of maps and plots
- Export of the data

4.7 Use Case #7 Regional Cryosphere Climate Service

User Characteristics: User Level 2 expert user (User Community 3 Climate service developers and providers)

Problem Definition:

The Federal Office of Environment (FOEN) in Switzerland wants to provide an internet-based platform to disseminate latest information on the cryosphere and its changes in Switzerland. Such

information could be, for example, the number of days with snow or other parameters like the glacier extent or start of the melting season.

Before the technical work with the toolbox can be performed a user survey would be required to obtain detailed requirements for such a climate service.

Required Toolbox Features:

- Access to and ingestion of RGI Glacier and WGMS fluctuation data
- Access to and ingestion of other available data (e.g. meteorological and snow cover data))
- Spatial and temporal sub-setting (e.g. bei country)
- Access to and ingestion of latest meteorological data
- Generation of graphs (e.g. cumulative glacier length changes): descriptive statistical analysis (at least mean values, variances, anomalies) with user-controlled display and format options, annotations (need to load and display information on limitation and data sources)
- Decision on any other data that should be made available (e.g. more permanently, quick links)

Note: The general decision on layout, data sets etc. will be taken by the FOEN outside the CCI Toolbox but will be input to the selection options.

It should be noted that this website exists (https://naturwissenschaften.ch/topics/snow-glaciers-permafrost/glaciers) which is effevctively this use case. However, the use case will have country specific functionalities and also for the larger scope (or other regions) so the UC should be retained .

4.8 Use Case #8 World Glacier Monitoring Service

User Characteristics: User Level 2 expert users (User Community 5 international bodies)

Problem Definition:

A service of the World Glacier Monitoring Service (WGMS) based on ESA CCI products, combined with other environmental parameters as well as meta data on glaciers, could be the provision of a database of glacier volume changes derived from remote sensing data (e.g. DEM differencing and altimetry sensors)

Required Toolbox Features:

- Access to and ingestion of RGI Glacier and WGMS fluctuation data
- Access to and ingestion of glacier meta data
- Spatial subsetting and temporal filtering of data according to user defined criteria
- Data quality and consistency checks
- Search for information about persons responsible for meta data according to a list of criteria, procurement of meta data

- Visualisation of dataset time series: e.g. individual values, cumulative, trends

4.9 Use Case #9 Relationships between Aerosol and Cloud ECV

User Characteristics: User Level 1 High-level expert user (User Community 2 earth system science community), educational

Problem Definition:

A climate scientist wishes to analyse potential correlations between Aerosol and Cloud ECVs.

Required Toolbox Features:

- Access to and ingestion of ESA CCI Aerosol and Cloud data (Aerosol Optical Depth and Cloud Fraction)
- Geometric adjustments
- Spatial (point, polygon) and temporal subsetting
- Visualisation of both times series at the same time: e.g. time series plot, time series animation
- Correlation analysis, scatter-plot of correlation statistics, saving of image and correlation statistics on disk (format options)

4.10 Use Case #10 Scientific Investigation of NAO Signature

User Characteristics: User Level 1 High-level expert user (User Community 2 earth system science community)

Problem Definition:

A climate scientist wishes to investigate the signature of the North Atlantic Oscillation (NAO) in multiple ECVs using a operation built by another climate scientist and contributed to the toolbox.

Required Toolbox Features:

- Access to and ingestion of ESA CCI ECV data (e.g. clouds, sea ice, sea level, SST, soil moisture)
- Access to and ingestion of external data (NAO time series)
- Geometric adjustments
- Spatial and temporal subsetting
- Use of externally developed plug-in to apply R [RD-7]: removal of seasonal cycles, lag-correlation analysis between each ECV and the NAO index
- Generation of time-series plot for each ECV
- Export statistics output to local disk

4.11 Use Case #11 School Project on Arctic Climate Change

User Characteristics: User Level 3 non-expert users (User Community 6 undergraduate and postgraduate students)

Problem Definition:

As part of a project on Arctic climate change, an undergraduate student wishes to look at different ECVs on a polar stereographic projection.

Required Toolbox Features:

- Access to and ingestion of CCI ECV data (e.g. sea ice, ice sheets, sea level, SST, clouds aerosol)
- Access to and ingestion of ECV data from external server
- Remapping to fit data onto user-chosen projection
- Spatial and temporal subsetting
- Gap-filling (user-chosen strategy)
- Generation of scalable maps

4.12 Use Case #12 Marine Environmental Monitoring

User Characteristics: User Level 2 expert users (User Community 3 climate service developers and providers providing services for User Community 7 knowledgeable public)

Problem Definition:

The eReef project examines the living conditions of the Great Barrier Reef via two subprojects. On the one hand, the aim of the Marine Water Quality Dashboard is to estimate water quality indicators from ocean colour data to deduce brightness and therefore the vitality of coral-competing seagrass and algae. ReefTemp Next Generation, on the other hand, seeks to assess the risk of bleaching due to overly warm water by calculating heat stress indices. This could also be a task for the CCI Toolbox environment.

Required Toolbox Features:

- Access to and ingestion of ESA CCI SST and Ocean Colour data
- Access to and ingestion of data regarding brightness-plant growth relationships, competitor relationships (plant growth-coral vitality), and heat stress-coral vitality relationships.
- Geometric adjustments
- Temporal and spatial subsetting
- Implementation of a water optical property model (plug-in, CLI, API)
- Calculation of anomalies, extremes (+ trend analysis, correlations)
- Index calculation (plug-in, CLI, API)
- Visualisation, graphs, data export

4.13 Use Case #13 Drought Occurrence Monitoring in Eastern Africa

User Characteristics: User Level 2 expert users (User Communities 3 climate service developers and providers and 5 international bodies providing services for User Community 7 knowledgeable public)

Problem Definition:

Due to time-lagged teleconnections, weather conditions in Eastern Africa are highly influenced by climate modes of variability in remote regions. Therefore, climate indices such as for ENSO, MJO, or QBO as well as the NDVI can be used to estimate the drought probability in Africa. Long time series from satellite observations act as a basis for the construction of statistical forecasting models, which are then run by latest meteorological data.

Required Toolbox Features:

- Access to and ingestion of ESA CCI SST, Clouds, Soil Moisture, and Fire data
- Access to and ingestion of non-CCI observational (e.g. NST, PRE, OLR, SLP, NDVI) and latest meteorological data
- Geometric adjustments
- Spatial and temporal subsetting (for each variable)
- NDVI and climate index calculation (ENSO, MJO, QBO indices), includes descriptive statistics
- Estimation of predictor (SST, SST gradients, OLR, cloud properties, climate indices) – predicant (NST and PRE E Africa) relationship by time-lagged (linear) regression model (plug-in, CLI, API)
- Run model by means of latest meteorological data
- Visualisation and export of results (graphs, maps, animations, tables)

4.14 Use Case #14 Drought Impact Monitoring and Assessment in China

User Characteristics: User Level 2 expert users (User Communities 3 climate service developers and providers and 5 international bodies)

Problem Definition: *(Solely basic idea taken from WMO (2015))*

Drought occurrence and severity in terms of fire, vegetation state, and soil moisture shall be estimated by the use of temperature and rainfall (+ humidity and evapotranspiration) data to prepare countermeasures. This is achieved by the construction of an empirical statistical model using satellite-derived time series which is afterwards run by actual meteorological data.

Required Toolbox Features:

- Access to and ingestion of ESA CCI Soil Moisture and Fire data
- Access to and ingestion of non-CCI NST, PRE, and NDVI observation and latest meteorological data
- Geometric adjustments

- Spatial and temporal subsetting (for each variable)
- (Descriptive statistic analysis)
- Estimation of predictor (NST, PRE) – predicant (soil moisture, vegetation state, fire occurrence) and PRE E Africa) relationship by time-lagged (linear) regression model (plug-in, CLI, API)
- Run model by means of latest meteorological data
- Visualisation and export of results (graphs, maps, animations, tables)

4.15 Use Case #15 Renewable Energy Resource Assessment with regard to Topography

User Characteristics: User Level 2 expert users (User Communities 3 climate service developers and providers and 5 international bodies)

Problem Definition:

The long-term potential for renewable energy generation is to be estimated by considering the effect of cloud features, aerosols, ozone, and water vapour on solar irradiance as well as topographical data.

Required Toolbox Features:

- Access to and ingestion of ESA CCI Ozone, Clouds, and Aerosols data
- Access to and ingestion of non-CCI data (water vapour, irradiance)
- External topographical data: **preprocessed** data regarding roof area, tilt, orientation from DEM
- Geometric adjustments
- Spatial and temporal subsetting
- Implementation of fast radiative transfer calculations (plug-in, CLI, API) to deduce solar irradiance
- Extraction of areas with high potential regarding solar irradiance (set appropriate boundary values)
- Extraction of areas with suitable tilt and orientation
- Visualisation of suitable areas in a map
- Estimation of Solar Power potential from pixel count
- Export of Results

4.16 Use Case #16 Monitoring Tropical Deforestation

User Characteristics: User Level 2 expert users (User Communities 3 climate service developers and providers and 5 international bodies)

Problem Definition:

Maps of forest cover, change, and deforestation shall be produced depicting forest status and trends for 5-year periods centred around 2000, 2005, and 2010. Additionally, vector data regarding infrastructure (e.g. road works) could be obtained from local authorities and compared with forest evolution.

Required Toolbox Features:

- Access to and ingestion of ESA CCI Land Cover data
- Additional: access to and ingestion of vector data regarding infrastructure
- Spatial and temporal adjustments and subsetting
- Extraction of forest class
- Estimation of forest area for multiple time-steps
- Additional: layer operations comprising infrastructure and forest data (vector and raster)
- Visualisation of forest area changes (animated?), relation to infrastructure
- Data export

4.17 Use Case #17 Stratospheric Ozone Monitoring and Assessment

User Characteristics: User Level 2 expert users (User Communities 3 climate service developers and providers and 5 international bodies)

Problem Definition:

As UV exposure is a highly relevant health factor, the state of the ozone layer shall be monitored as well as its influence parameters.

Required Toolbox Features:

- Access to and ingestion of ESA CCI Ozone data
- Access to and ingestion of surface-based measurements of ozone-depleting substances, data regarding UV exposure
- Geometric adjustments
- Spatial (horizontal and vertical) and temporal subsetting
- Assessment of total ozone values as well as vertical profiles
- Estimation of ozone-UV exposure relationship
- Correlation analysis between ozone values and concentrations of ozone-depleting substances
- Trend analysis of stratospheric ozone concentrations
- Visualisation (maps, graphs) and export of the results

4.18 Use Case #18 Examination of ENSO and its Impacts based on ESA CCI Data

User Characteristics: User Level 3 non-expert users (User Community 6 undergraduate and postgraduate students)

Problem Definition:

As a project work, a student's task is to conduct an examination of ENSO solely by the use of ESA CCI data. For this, the first principal component of the combined EOF analysis of cloud cover, sea level and sea surface temperature in the (central/eastern) equatorial Pacific shall be intercompared with ocean colour (eastern equatorial Pacific), fire disturbance, and soil moisture (landmasses adjacent to the eastern and western tropical Pacific).

Required Toolbox Features:

- Access to and ingestion of ESA CCI Cloud, Fire, Ocean Colour, Soil Moisture, Sea Level, and SST data
- Temporal/spatial selections or aggregations in case of differing temporal or spatial data set resolutions
- Temporal and spatial filtering regarding time period and particular areas of interest, spatial mean values for ocean colour, fire, soil moisture (particular regional boundaries need to be assessed)
- Test for normal distribution (using plug-in/API)
- EOF analysis:
    - Removal of seasonal cycle and linear/quadratic trends to clarify ENSO signal
    - Conduction of EOF analysis involving array processing and statistics by means of a plug-in/API
    - Visual examination of EOF map and eigenvalues, to clarify if ENSO typical patterns are present and explained variance is sufficiently high
- Correlation statistics (different lags) between time series of first principal component and ocean colour, fire disturbance E, fire disturbance W, soil moisture E, soil moisture W including t test for the assessment of significance
- Plotting of all computed time series in one coordinate system
- Option to manually select point location on globe to compare data with PC1
- Storage of plots, time series data, correlation statistics on local disk

4.19 Use Case #19 GHG Concentrations over Europe

User Characteristics: User Level 3 non-expert user (User Community 7 knowledgeable public), educational

Problem Definition:

A person wants to know how greenhouse gas concentrations over Europe evolved during the last years.

Required Toolbox Features:

- Access to and ingestion of ESA CCI GHG data
- Selection of required products/variables
- Temporal and spatial subsetting
- Generation of maps/animations depicting the evolution of GHG concentrations

4.20 Use Case #19a Ozone Concentrations over the Pole

User Characteristics: User Level 3 non-expert user (User Community 7 knowledgeable public), educational

Problem Definition:

A person wants to know how the ozeon concentrations over the Poles evolved during the last years.

Required Toolbox Features:

- Access to and ingestion of ESA CCI Ozone data
- Selection of required products/variables
- Temporal and spatial subsetting
- Generation of maps/animations depicting the evolution of Ozone concentrations

4.21 Use Case #20 Examination of North Eastern Atlantic SST Projections

User Characteristics: User Level 1 High-level expert user (User Community 1 international climate research community)

Problem Definition:

A climate scientist uses CCI data to validate the output of several CMIP5 models concerning SST in the north eastern Atlantic Ocean. Afterwards he picks the best model runs to perform a trend analysis regarding the future evolution using the ensemble mean and uncertainties as well as probability density functions. Applying an Analysis of Variance, he examines the different results of the models.

Required Toolbox Features:

- Access to and ingestion of ESA CCI SST data
- Access to and ingestion of CMIP5 model SST data
- Filtering regarding variable
- Geometric adjustments
- Spatial and temporal subsetting

- Quality assessment of model data by means of satellite-observed SST data using plug-in/API (user-determined validation method), discarding of models undercutting certain values
- Application of best models for trend analysis (removal of seasonal cycles)
- Calculation of SST anomaly/increase values for several time steps compared with reference data (ensemble mean and spread/uncertainties), construct probability density functions, examination of differing results by ANOVA
- Visualisation
- Data export

4.22 Use Case #21 Investigation of Relationships between Ice Sheet ECV Parameters

User Characteristics: User Level 1 High-level expert user (User Community 2 earth system science community)

Problem Definition:

A scientist wants to gain insight into the relationship between the Ice Sheets CCI ECV parameters. At first, Surface Elevation Change (SEC), Ice Velocity (IV), and Gravitational Mass Balance (GMB) are compared. Afterwards, a basin-wise comparison of Surface Elevation Change averages and Gravitational mass Balance averages is conducted. And finally, vector and grid data are compared by co-plotting of IV and Calving Front Location (CFL) data. Additionally, it would be interesting to examine the relationships between sea ice, SST around Greenland, glacier melt, respectively cloud cover and SEC/IV.

Required Toolbox Features:

- Access to and ingestion of CCI Ice Sheets ECV data (SEC, IV, GMB)
- Re-gridding of all data to the SEC grid
- Display the data as different layers
- Calculation of the IV vector magnitude (per pixel) and display as a new layer
- Temporal interpolation of the SEC data to the GMB data times
- Calculation of the correlation coefficient (per pixel) between the SEC data and the GMB data for a given GMB measurement time, display as a new layer

- Access to and ingestion of a polygon shapefile corresponding to one of the GMB basins
- Filtering of the SEC values and the GMB values; discarding of the ones outside the GMB basin polygon
- Calculation of the average of the GMB and SEC values inside the basin polygon for each point in the time series
- Plotting of the averaged values in a time series plot, comparison with the provided GMB total basin values

- Access to and ingestion of CCI Ice Sheet CFL time series; each element in the time series is a set of (lon/lat) line segments
- Plotting of the CFL line segments on top of the IV magnitude for different years

Optional:

- Access to and ingestion of CCI ECV data (sea ice, SST, glaciers, clouds)
- Re-gridding of all data to the SEC grid
- Temporal and spatial subsetting
- Calculation of correlation coefficients
- Visualisation and export

4.23 Use Case #22 Analysis of Equatorial Aerosol and Cloud Features using Hovmöller Diagrams

User Characteristics: User Level 1 High-level expert user (User Community 2 earth system science community)

Problem Definition:

A scientist wants to analyze the relation of aerosols and clouds in the equatorial region (5° S–5° N) by means of Hovmöller diagrams displaying the equatorial mean value as portion of the mean value over all latitudes for cloud fraction and aerosol optical depth (y-axis e.g. months since 1980, x-axis longitudes e.g. 100° W–80° E).

Required Toolbox Features:

- Access to and ingestion of ESA CCI Aerosol and Cloud data (Aerosol Optical Depth and Cloud Fraction)
- Geometric adjustments
- Temporal subsetting
- Calculation of requested anomaly values and side-by-side display of Hovmöller diagrams

5 User Requirements

In this section, the User Requirements are defined. In this context the following nomenclature is used:

- Shall: The requirement must be satisfied.
- Should: The requirement is strongly advised.
- May: The requirement is advisable.

Sub-requirements are labelled with lower case letters. In doing so, they are listed in the context of the higher-level requirement but have to be treated individually. Therefore, every sub-requirement has to be prioritised and considered on its own and can be discarded or retained independently from the particular higher-level requirement as well as other sub-requirements during the evolution of the URD. In particular, the sub-requirements are thought of as examples. The most important ones are intended to be implemented during the evolution and iteration of the toolbox.

5.1 Cardinal Requirements

Table 5-1: Cardinal Requirements.

Requirement ID	Requirement Description
CCIT-UR-CR0001	Extensibility. The toolbox shall provide the means for others to write bespoke functions for the toolbox, which extend the functionality provided by the Contractor.
CCIT-UR-CR0002	Location Independence. The toolbox shall operate either locally or remotely from both its source of ECV data and output destination.
CCIT-UR-CR0003	Openness. The toolbox shall be open source, using open source OTS products, and itself be made available to a wider community through appropriate open source licensing.
CCIT-UR-CR0004	Portability. The toolbox shall be designed and developed for optimal code portability. All CCI Toolbox software releases shall be cross-platform and cater for Windows, Linux and OS X environments.
CCIT-UR-CR0005	Up-to-dateness. The toolbox and all its modules shall be kept up to date with latest versions of CCI data access formats and services.

Requirement ID	Requirement Description
CCIT-UR-CR0006	Configurability. The toolbox and all its modules shall be configurable.

5.2 Architecture Requirements

Table 5-2: Architecture Requirements.

Requirement ID	Requirement Description
CCIT-UR-A0001	The CCI Toolbox shall offer a Graphical User Interface (GUI).
CCIT-UR-A0002	The CCI Toolbox shall offer a Command Line Interface (CLI).

5.3 Graphical User Interface Requirements

Table 5-3: Graphical User Interface Requirements.

Requirement ID	Requirement Description
CCIT-UR-GUI0001	The terminology within the CCI Toolbox GUI shall be adequate for non-scientific as well as scientific users.
CCIT-UR-GUI0002	The GUI shall include mouse applications.
CCIT-UR-GUI0003	The GUI shall include several frames to examine different data at the same time.
CCIT-UR-GUI0004	The GUI shall allow the output to be used as input/filtering for the next operation of the toolbox.
CCIT-UR-GUI0005	The GUI shall allow users to run multiple operations in parallel.
CCIT-UR-GUI0006	The GUI shall provide undo/redo capability making user actions reversible.
CCIT-UR-GUI0007	The GUI shall provide the following commands operating on the currently selected item in an application: a) Delete (deletes the item)

Requirement ID	Requirement Description
	b) Cut (copies the current item into the clipboard and deletes the item) c) Copy (copies the current item into the clipboard) d) Paste (inserts an item from the clipboard)
CCIT-UR-GUI0008	The GUI shall provide a function to inspect the properties of a currently selected item.
CCIT-UR-GUI0009	The GUI shall comprise a drag-and-drop functionality to drag a selected item to a compatible target.
~~CCIT-UR-GUI0010~~	~~The GUI shall comprise a print functionality to print the currently selected view.~~
CCIT-UR-GUI0011	The GUI shall provide a concise and clear feedback on all operations.
CCIT-UR-GUI0012	The GUI shall provide a progress indicator for operations which do not appear to return full control of the interface to the user immediately.
CCIT-UR-GUI0013	The GUI shall remain responsive where toolbox operation have high input/output demands or cause high CPU loads. If available computing resources are close to their limits, the GUI shall inform the user and offer a mitigation strategy.
CCIT-UR-GUI0014	The GUI shall validate user inputs and provide helpful guidance.
CCIT-UR-GUI0015	The GUI should enable the user to work on a rotatable globe.
CCIT-UR-GUI0016	The GUI shall advise, rather than prohibit, the climate user in their selection of data and operation(s).
CCIT-UR-GUI0017	The GUI shall advise, rather than prohibit, the climate user in their selection of data-operation(s) combinations.
CCIT-UR-GUI0018	The GUI shall include a timeline to drag in order to change the point in time

Requirement ID	Requirement Description
	for which data is displayed.
CCIT-UR-GUI0019	The GUI shall include the possibility to click on a location on the globe / on a map to show time series of the data assigned to the spatial point.

5.4 Command Line Requirements

Table 5-4: Command Line Requirements.

Requirement ID	Requirement Description
CCIT-UR-CL0001	The CLI shall provide the means of reading and executing script files written in *a)* The XML command language *(TBC)* b) Python [RD-8]

5.5 Documentation, Help, Support and Feedback Requirements

Table 5-5: Documentation, Help, Support and Feedback Requirements.

Requirement ID	Requirement Description
CCIT-UR-D0001	The user shall have access to data documentations and meta data.
CCIT-UR-D0002	The user shall have access to CCI Toolbox documentation sheets.
CCIT-UR-D0003	All GUI elements shall provide links into dedicated chapters of the online training materials suitable for all types of users.
CCIT-UR-D0004	The training materials shall include: a) Reference Documentation in the form of an e-book describing all CCI Toolbox functionality. The e-book shall be designed to allow easy reading on multiple devices including desktop monitor, tablet and smart phone. b) Tutorials Documentation in the form of an e-book c) Webinars

Requirement ID	Requirement Description
	d) API and Plugins Documentation including code examples e) Training course syllabus and material
CCIT-UR-D0005	A User help desk shall be provided, to give support in case of problems.
CCIT-UR-D0006	The CCI Toolbox shall offer the option for users to give feedback.
CCIT-UR-D0007	The CCI Toolbox should offer the option for users to contribute to the tools and make new tools and plug-ins available for other users.
CCIT-UR-D0008	Before any information on user metrics, unrecoverable failures etc. is collected or sent to a remote machine, permission from the user shall be obtained.

5.6 Extensibility Requirements

Table 5-6: Extensibility Requirements.

Requirement ID	Requirement Description
CCIT-UR-E0001	The CCI Toolbox shall allow for dynamic extension by the use of plug-ins.
CCIT-UR-E0002	The CCI Toolbox plug-in capability shall allow for dynamic extension of all modules at runtime: a) The Data Module to introduce parsing of NetCDF-based non-CCI CDR types b) The Data Module to introduce NetCDF-based non-CCI CDR types to the Common Data Model c) The Logic Module to introduce new operations d) The Presentation module to introduce new forms of presenting output of the logic module
CCIT-UR-E0003	By offering an Application Programming Interface (API) via the plug-in capability, the user shall be able to use a programming language to perform customised computations.

Requirement ID	Requirement Description
CCIT-UR-E0004	The API shall provide the option to choose from several programming languages, this option should include e.g.: a) The native language used for CCI Toolbox development b) Python [RD-8] c) R [RD-7] ~~d) MATLAB~~ e) FORTRAN ~~f) Java~~ ~~g) IDL~~ h) C++ ~~i) C+~~ j) C

5.7 Control Requirements

Table 5-7: Control Requirements.

Requirement ID	Requirement Description
CCIT-UR-C0001	The user interfaces and APIs shall adhere to the following usage-centred design principles: a) Consistency in the form, structure and operation of the interface. b) Intuitiveness such that the user should have to learn only a few, but general and powerful, concepts that are used throughout all software interfaces. c) Effectiveness such that no more options nor information should be provided to the user than is absolutely necessary. d) Suitability of the user interface to each climate user type.

5.8 Data Module Requirements (functional)

Table 5-8: Data Module Requirements.

Requirement ID	Requirement Description
CCIT-UR-DM0001	Data access and input. The CCI toolbox shall be capable to a) Access b) Ingest c) Display d) Process different kinds and sizes of data.
CCIT-UR-DM0002	The CCI Toolbox shall be capable to handle large datasets.
CCIT-UR-DM0003	The CCI Toolbox shall be capable to handle multi-dimensional data.
CCIT-UR-DM0004	The CCI Toolbox shall be capable to handle multiple inputs.
CCIT-UR-DM0005	The data module shall provide a means to access all ECV data products and metadata via standard user-community interfaces, protocols, and tools, including at minimum: a) Local file system accessible directory containing CCI ECV data products, GeoTIFF image files and vector information files. b) Remote file system accessible directory containing CCI ECV data products, GeoTIFF image files and vector information files. c) FTP and HTTP standard file-based access ~~d) GridFTP~~ e) OPeNDAP server for NetCDF f) Web Map Service (WMS) g) Web Coverage Service (WCS) h) Web Feature Service (WFS) i) Obs4MIPs & Earth System Grid Federation (ESGF) j) CMIP5 and CMIP6
CCIT-UR-DM0006	The CCI Toolbox shall allow access to and ingestion of ESA CCI datasets.

Requirement ID	Requirement Description
CCIT-UR-DM0007	The data module shall be capable of ingesting ECV data products from a single type of CCI ECV into the Common Data Model.
CCIT-UR-DM0008	The data module shall be capable of ingesting ECV data products from multiple types of CCI ECVs into a Common Data Model.
CCIT-UR-DM0009	The data module shall be capable of holding information of any CCI ECV type.
CCIT-UR-DM0010	The data module shall have the means to attain meta-level status information per ECV type (for example, the total time length of the ECV record, how many products it contains) and attach this to the Common Data Model.
CCIT-UR-DM0011	The CCI Toolbox shall allow access to and ingestion of non-CCI data: a) Non-CCI ESA data b) Non-ESA data c) Historical data, observations d) Reanalysis data e) User/external data f) Latest meteorological data g) Model data h) Vector data (with time-stamp; e.g. shape files) i) Topographic data (from DEM) j) Meta data k) Database data
CCIT-UR-DM0012	Therefore, CCI Toolbox shall be capable to handle different input file formats, e.g.: a) NetCDF b) HDF c) Binary d) Shape(GIS programme compatible vector)

Requirement ID	Requirement Description
	e) GeoTIFF (GIS programme compatible raster) f) GRIB g) ASCII ~~h) XML (for meta data) KMZ~~
CCIT-UR-DM0013	The CCI Toolbox shall allow filtering for and extraction of: Parts of variables contained in a file (quality flags, cloud mask etc.) a) ECV b) ECV product c) Geophysical Quantity d) Dataset e) Data productQuality parameters

5.9 Logic Module Requirements

Table 5-9: General Logic Module Requirements.

Requirement ID	Requirement Description
CCIT-UR-LM0001	The Toolbox shall include a operation management allowing easy selection of tools and functionalities.
CCIT-UR-LM0002	The Toolbox shall be capable of accommodating ECV-specific operations in cases where the processing is specific to an ECV.
CCIT-UR-LM0003	To support less experienced users with the execution of processing chains, the Toolbox should provide a tool for easy construction of graphs without any knowledge of a programming language (Graph Builder).
CCIT-UR-LM0004	The Graph Builder tool should enable the selection of a number of predefined standard processing chains.
CCIT-UR-LM0005	The Graph Builder tool should include the means to configure a operation chain comprised of one operation only from the library to execute on data from the Common Data Model.

Requirement ID	Requirement Description
CCIT-UR-LM0006	In its tools, the CCI Toolbox shall offer default values for lower level users as well as selectable options for higher level users.
CCIT-UR-LM0007	The CCI Toolbox (GUI and CLI) should enable the user to save criteria and procedures for later use in a session file.
CCIT-UR-LM0008	The CCI Toolbox should offer the option to perform a task in regular intervals.
CCIT-UR-LM0051	The CCI Toolbox should include a functionality to perform end-to-end use cases as one single operation.

Table 5-10: Logic Module Requirements. Geometric Adjustments.

Requirement ID	Requirement Description
CCIT-UR-LM0009	The CCI Toolbox shall be capable for different kinds of geometric adjustments.
CCIT-UR-LM0010	The CCI Toolbox shall provide means for grid adaption, e.g.: a) re-projection / remapping b) co-registration.
CCIT-UR-LM0011	The CCI Toolbox shall provide different grid options, e.g.: a) UTM b) Geographic c) Regular lat-lon d) Polar centred e) Sinusoidal ~~f) Tripolar~~ g) EASE ~~h) LCC~~ ~~i) GGRS87~~

Requirement ID	Requirement Description
	j) Raw swath resolution
CCIT-UR-LM0012	The CCI Toolbox shall provide different ellipsoid options, e.g.: a) WGS84 b) GRS80 c) Bessel d) Clarke
CCIT-UR-LM0013	The CCI Toolbox shall provide means for: a) Resampling b) resolution manipulations c) interpolation d) extrapolation e) spatial aggregation.
CCIT-UR-LM0014	The toolbox shall provide different methods for resampling and co-registration, e.g.: a) Cubic convolution b) Nearest neighbour c) Bilinear d) Spline
CCIT-UR-LM0015	The CCI Toolbox shall provide means for geospatial gap filling.
CCIT-UR-LM0016	The toolbox shall provide different methods for geospatial gap filling, e.g.: a) Linear b) Bi-cubic
CCIT-UR-LM0017	The CCI Toolbox shall implement a functionality that performs a matchup dataset generation for given location and pixel environment.
CCIT-UR-LM0018	The CCI Toolbox shall provide different methods for matchup dataset generation, e.g.:

Requirement ID	Requirement Description
	a) Spatial distance selection b) Temporal distance selection c) Nearest neighbour

Table 5-11: Logic Module Requirements. Non-geometric Adjustments.

Requirement ID	Requirement Description
CCIT-UR-LM0019	The CCI Toolbox shall be capable for different kinds of non-geometric adjustments.
CCIT-UR-LM0020	The CCI Toolbox shall provide means for temporal aggregation.
CCIT-UR-LM0021	The CCI Toolbox shall provide means for temporal gap filling.
CCIT-UR-LM0022	The toolbox shall provide different methods for temporal gap filling, e.g.: a) Linear b) Nearest Neighbour
CCIT-UR-LM0023	The CCI Toolbox shall provide means for temporal concatenation.
[redacted] ~~CCIT-UR-LM0024~~	~~The CCI Toolbox shall provide means for the adjustment of reference keys.~~

Table 5-12: Logic Module Requirements. Filtering, Extractions, Definitions, Selections.

Requirement ID	Requirement Description
CCIT-UR-LM0025	The CCI Toolbox shall include the capability to perform several types of filtering, extractions, definitions and selection.

Requirement ID	Requirement Description
CCIT-UR-LM0026	The CCI Toolbox shall include functionality for geospatial filtering/subsetting, e.g.: a) Selection of an area from a list of main areas (continents, oceans, hemispheres, TransCom regions, …) b) The area of interest defined as a point c) The area of interest defined as a polygon d) The area of interest defined manually by drawing a polygon/selecting a point on a map shown in the GUI e) The area of interest defined by coordinates f) The area of interest delineated in a shape file (cp. CCI-UR-LM0044) g) In both, horizontal and vertical dimension
CCIT-UR-LM0027	The CCI Toolbox shall allow the user to select a geometric resolution, both: a) Horizontal b) Vertical
CCIT-UR-LM0028	The CCI Toolbox shall allow the user to select a season of interest.
CCIT-UR-LM0029	The CCI Toolbox shall allow the user to select a temporal resolution (annual, monthly, daily, hourly).
CCIT-UR-LM0030	The CCI Toolbox shall include functionality for temporal filtering/subsetting by entering onset and end date.
CCIT-UR-LM0031	The CCI Toolbox shall allow the user to select and extract minimum and maximum values (temporal and spatial).
CCIT-UR-LM0032	The CCI Toolbox shall include the capability to extract pixel classes (e.g. vegetation, forests from LC data).
CCIT-UR-LM0033	The CCI Toolbox shall include the capability to extract pixels by attributes/values (e.g. pixels with values undercutting boundary values).
CCIT-UR-LM0034	The CCI Toolbox shall include land/sea/lake masks to extract/select pixels.

Table 5-13: Logic Module Requirements. Statistics and Calculations.

Requirement ID	Requirement Description
CCIT-UR-LM0035	The CCI Toolbox shall provide means for data analysis and statistical calculations.
CCIT-UR-LM0036	The CCI Toolbox shall provide means for univariate descriptive statistics, e.g.: a) Arithmetic mean, variance, minimum, maximum, skewness (all temporal, spatial or across multiple datasets) b) Sorting, percentiles, median c) Relative and standardized values d) Changes/deviations/differences/anomalies (temporal, spatial, between datasets) e) Uncertainties/spreads f) Filtering (detection of outliers, temporal high/low pass filtering, frequency filtering to separate different time-scales of variability,…) g) Trend analysis / time series analysis including Fourier series/transformations h) Removal of seasonal cycles i) Hovmöller analysis.
CCIT-UR-LM0037	The CCI toolbox shall offer the option to compute statistics across an ensemble of datasets.
CCIT-UR-LM0038	The CCI Toolbox shall include tools for data intercomparison (bi-variate statistics), also between different ECVs, e.g.: a) Correlation analysis (lag option;cell-by-cell option) b) Regression analysis
CCIT-UR-LM0039	The CCI Toolbox shall include tools for statistical inference, e.g.: a) Test statistics (e.g. t test) b) Analysis of Variance (ANOVA) c) Distributions d) Probability Density Functions

Requirement ID	Requirement Description
CCIT-UR-LM0040	The CCI Toolbox shall include an extensible library for index calculation with variable- and location-specific index options and functionality for additional user-controlled index definition.
CCIT-UR-LM0041	The CCI Toolbox shall be capable for array processing and statistics.
CCIT-UR-LM0042	The CCI Toolbox shall be capable for complex computations like: a) Factor analysis b) EOF analysis c) K-means cluster analysis d) EM cluster analysis e) Canonical Correlation Analysis f) Singular Value/Vector Decomposition
CCIT-UR-LM0043	The CCI Toolbox shall be capable for calculations comprising different bands/layers/data sets (band arithmetic and statistics).
CCIT-UR-LM0052	For easy but reasonable anomaly calculation and other climatological purposes the CCI Toolbox should supply a tool for the creation of reference values by calculating long term averages.

Table 5-14: Logic Module Requirements. GIS Tools.

Requirement ID	Requirement Description
CCIT-UR-LM0044	The CCI Toolbox shall include basic GIS tools to enable: a) Visualisation of GIS files b) Reading and use of attributes stored in GIS files c) Estimation of areas from pixel counts d) Layer operations e) Data merging of different ECVs into a single product with a common raster f) Clipping of a raster dataset using a vector dataset (cp. CCIT-UR-

Requirement ID	Requirement Description
	LM0026) g) Conversion between raster and vector formats h) Buffering This does **not** include further tools for GIS analysis and computations which could anyway be added by a **user-supplied** plug in.

Table 5-15: Logic Module Requirements. Evaluation and Quality Control.

Requirement ID	Requirement Description
CCIT-UR-LM0045	The CCI Toolbox shall offer tools for quality control, including non-binary flagging.
CCIT-UR-LM0046	The CCI Toolbox should enable the user to perform visual quality and consistency checks, e.g. by means of histograms.
CCIT-UR-LM0047	The CCI Toolbox shall provide instruments for consistency checks (with historical data, between datasets).
CCIT-UR-LM0048	The CCI Toolbox shall be capable to perform analysis, filtering, exploration and propagation of uncertainties.
CCIT-UR-LM0049	The CCI Toolbox should provide means to conduct model calibration and evaluation.
CCIT-UR-LM0050	The CCI Toolbox should provide means for data validation.

5.10 Presentation Module Requirements

Table 5-16: Presentation Module Requirements.

Requirement ID	Requirement Description

Requirement ID	Requirement Description
CCIT-UR-PM0001	The GUI shall be able to display all ECVs.
CCIT-UR-PM0002	The presentation module shall be capable of presenting output of processing undertaken by the logic module.
CCIT-UR-PM0003	The GUI shall be able to display data from all presentation module file types.
CCIT-UR-PM0004	The GUI shall provide the means to display multiple 3D globes side by side, with two displaying climate data and one displaying their delta.
CCIT-UR-PM0005	The CCI Toolbox shall include a powerful visualisation functionality to enable the user to generate informative figures of different kinds, including: a) Quick-look figures b) More elaborated, customizable figures
CCIT-UR-PM0006	The CCI Toolbox visualisation module shall comprise a) Plots b) Charts c) Maps d) 3D graphics (e.g. vertical profiles) e) Animations f) Tables g) The option to display multiple data products in one plot h) The option to display multiple data products as side-by-side plots
CCIT-UR-PM0007	The CCI Toolbox shall enable the user to individually adjust layout and annotations of graphics. This includes for maps: a) Colour scheme options b) Scalability (zoom-in, zoom-out, select rectangular regions for detailed view) c) Coordinate system options

Requirement ID	Requirement Description
	d) Different north arrows For plots and charts: e) Type of chart f) Colours g) Symbols h) Axes Generally: i) Legends j) Annotations k) Significance in correlation plots/maps l) Data source information
CCIT-UR-PM0008	The CCI Toolbox shall provide the option to save all data to a local disk.
CCIT-UR-PM0009	The CCI Toolbox shall enable the user to choose from different output file formats. For geographical data: a) NetCDF ~~b) KML~~ c) HDF d) Binary e) Shape (GIS programme compatible vector) f) GeoTIFF (GIS programme compatible raster) g) GRIB h) ASCII i) XML ~~j) KMZ~~ For figures: k) PNG l) JPEG ~~m) BMP~~

Requirement ID	Requirement Description
	~~n) TIF~~ o) PDF For animations: p) Multiple PNGs q) Multiple GeoTIFFs r) GIF s) Movie format like mp4 For tables: t) CSV u) Txt v) Data file in the bespoke file format of the CDM.
CCIT-UR-PM0010	The design of the presentation module shall not prohibit future easy development of the toolbox to provide Web Services.
CCIT-UR-PM0011	The Contractor shall liaise with the CCI Data Access Portal project and CCI Visualisation Corner project to ensure the CCI Toolbox output is in a form compatible with their needs. Contacts will be provided by ESA at KO.

5.11 Deployment Requirements

Table 5-17: Deployment Requirements.

Requirement ID	Requirement Description
CCIT-UR-De0001	The source code and binaries shall be made publically available.
CCIT-UR-De0002	CCI Toolbox installation packs shall be provided for the following target platforms: OS X, Linux and Windows.
CCIT-UR-De0003	Installation packs shall be provided for easy toolbox installation which shall include the executable, source code and any other required assets. Required assets may be downloadable during the installation process if their size prohibits their practical inclusion in the installation pack.

Requirement ID	Requirement Description
CCIT-UR-De0004	The Contractor shall define an appropriate licensing scheme for distribution of the CCI Toolbox, considering the extensibility of the toolbox and technical sustainability.

5.12 Hardware and Operating System Requirements

Table 5-18: Hardware and Operating System Requirements.

Requirement ID	Requirement Description
CCIT-UR-HS0001	The toolbox shall be compatible with conventional 64-bit personal computer operating systems including Linux, Microsoft Windows, and OS X.

5.13 Performance Requirements

Table 5-19: Performance Requirements.

Requirement ID	Requirement Description
~~CCIT-UR-P0001~~	~~The toolbox shall have an intelligent installer that evaluates the system characteristics (including amount of RAM, number of CPU cores, types of hard drives (disk or SSD), and operating system) and sets the parameters affecting toolbox performance to optimized values, for instance:~~ ~~a) Java VM heap space, Java VM cache size~~ ~~b) Default tile sizes for random access and deterministic tile caching strategies~~ ~~c) Setting the locations of important files to appropriate hard drives according to their speed (RAM disk > SSD > hard disk).~~

Requirement ID	Requirement Description
[redacted] ~~CCIT-UR-P0002~~	~~If necessary, the intelligent installer shall execute a parameter optimisation, whereby benchmarks are run to determine what the optimal values of these parameters are on the target system.~~
[redacted] ~~CCIT-UR-P0003~~	~~The parameter optimisation shall present the values of the set parameters to the user and offer the possibility for setting the parameters manually.~~
~~CCIT-UR-P0004~~	~~It shall be possible to re-run the parameter optimisation after toolbox installation to update the parameter values.~~
CCIT-UR-P0005	Assuming an ECV data product consisting of a 10 km x 10 km resolution global raster of double precision geophysical variables hosted on a local disk, the toolbox shall be able to: a) Fully ingest its data into the Common Data Model in a period no longer than 1.0s b) Apply a dummy algorithm to every data point in the resulting Common Data Model in a period no longer than 0.1s c) Visualise the content of the resulting Common Data Model in a period no longer than 0.5s

5.14 Additional Functionality Requirements

Table 5-20: Additional Functionality Requirements.

Requirement ID	Requirement Description
CCIT-UR-AF0001	The CCI Toolbox may provide the option to be used as a widget on an external website.
CCIT-UR-AF0002	The CCI Toolbox may provide a possibility to embed tools in own operational procedures (e.g. data to run a prediction model).

5.15 Additional User Requirements during Iterations

Table 5-21: Additional User Requirements during Iterations.

Requirement ID	Mapping [AD-4]	Requirement Description
CCIT-UR-??	Roadmap V7	Geometry Editor
CCIT-UR-??	Roadmap V7	Workflow Editor
CCIT-UR-CR0007	#367	The toolbox shall allow for Cate software updates without reinstallation .
CCIT-UR-GUI0020	Roadmap V7	The GUI shall allow for automatic updates.
CCIT-UR-CL0002	Roadmap V7	The CLI should allow for automatic updates
CCIT-UR-CL0003	#29	Standard operations should have short names.
CCIT-UR-CL0004	#69	The CLI should offer renaming of workspace resources.
CCIT-UR-D0004d (supplement)	Roadmap V7	Plugin Examples
CCIT-UR-DM0005a,b (supplement)	#491	The toolbox shall allow for displaying large vector data sources.
CCIT-UR-DM0005f (supplement)	Roadmap V7	WMS/WMTS Layers
CCIT-UR-DM0013	#13	The CLI shall display variable names of a dataset.

Requirement ID	Mapping [AD-4]	Requirement Description
(supplement)		
CCIT-UR-DM0014	Roadmap V7	The CCI Toolbox shall allow access to and ingestion of DIAS Data sources.
CCIT-UR-DM0015	Roadmap V7	The CCI Toolbox shall allow access to and ingestion of SNAP Data Sources.
CCIT-UR-DM0016	#227 #337	The toolbox should notify users about new datasets on ODP and report their availability.
CCIT-UR-LM0038 (supplement)	#87	The toolbox shall save results of spatial correlation analysis as ASCII table or netcdf.
CCIT-UR-LM0038c	#262	Pearson correlation single timeseries broadcasting.
CCIT-UR-PM0006 (supplement)	#27	The CLI should offer interactive plotting.
CCIT-UR-PM006aa	#278	Scatter plot
CCIT-UR-PM006ab	#278	Contour plot
CCIT-UR-PM0012	Roadmap V7	The CCI Toolbox shall provide a workflow visualisation.
	Roadmap V8	Script Operation

6 Requirements Traceability

6.1 Traceability of User Requirements

The source(s) of a particular requirement can be traced with the aid of the Requirements Traceability Matrix shown in Table 6-1. Therein, requirements are listed in rows and sources (Use Cases, Source Documents) in columns. Corresponding cells are marked.

Table 6-1: Requirements Traceability Matrix.

	CCIT-CU-UC-01	CCIT-CU-UC-02	CCIT-CU-UC-03	CCIT-CU-UC-04	CCIT-CU-UC-05	CCIT-CU-UC-06	CCIT-CU-UC-07	CCIT-CU-UC-08	CCIT-SWR-UC-01	CCIT-SWR-UC-02	CCIT-SWR-UC-03	CCIT-SD-UC-01	CCIT-SD-UC-02	CCIT-SD-UC-03	CCIT-SD-UC-04	CCIT-SD-UC-05	CCIT-SD-UC-06	CCIT-CU-UC-09	CCIT-CU-UC-10	CCIT-CU-UC-11	CCIT-WS-UC-01	CCIT-WS-UC-02	Sow	S3RB	CMUG	OPR	PUR	UR Quesstionnaire	Commonsense	Chamion Users
Cardinal Requirements																														
CCIT-UR-CR0001																							SWR-CR1						X	
CCIT-UR-CR0002																							SWR-CR6						X	
CCIT-UR-CR0003																							SWR-CR9						X	
CCIT-UR-CR0004																							SWR-CR10						x	
CCIT-UR-CR0005																							SWR-R-DM8, SWR-DM18						X	
CCIT-UR-CR0006																							SWR-R-DM12, SWR-R-A5						X	
Architecture Requirements																														
CCIT-UR-A0001																							SWR-R-C3, SWR-RA5						X	
CCIT-UR-A0002																							SWR-R-C3, SWR-RA5						X	

Graphical User Interface Requirements																													
CCIT-UR-GUI0001																												X	
CCIT-UR-GUI0002																												X	
CCIT-UR-GUI0003																				X				C	OPR			X	
CCIT-UR-GUI0004																						SWR-R-GUI8						X	
CCIT-UR-GUI0005																						SWR-R-GUI8						X	
CCIT-UR-GUI0006																						SWR-R-GUI11						X	
CCIT-UR-GUI0007																							S						
CCIT-UR-GUI0008																							S						
CCIT-UR-GUI0009																							S						
CCIT-UR-GUI0010																							S					X	
CCIT-UR-GUI0011																						SWR-R-GUI12						X	
CCIT-UR-GUI0012																						SWR-R-GUI13						X	
CCIT-UR-GUI0013																						SWR-R-GUI9							
CCIT-UR-GUI0014																						SWR-R-GUI14							
CCIT-UR-GUI0015																												X	
CCIT-UR-GUI0016																						SWR-R-GUI3							
CCIT-UR-GUI0017																						SWR-R-GUI4							
CCIT-UR-GUI0018																													X
CCIT-UR-GUI0019																													X

Command Line Requirements																													
CCIT-UR-CL0001																							SWR-R-CL1						
Documentation, Help, Support and Feedback Req.s																													
CCIT-UR-D0001																												X	
CCIT-UR-D0002																												X	
CCIT-UR-D0003																							SWR-R-GUI10						
CCIT-UR-D0004																							SWR						
CCIT-UR-D0005																												X	
CCIT-UR-D0006																							SWR						
CCIT-UR-D0007																									C				
CCIT-UR-D0008																							SWR-R-O1, SWR-R-O2, SWR-R-DM16						
Extensibility																													
CCIT-UR-E0001	X																						SWR-R-E1, SWR-R-E7, SWR-CR2						
CCIT-UR-E0002																							SWR-R-E2. SWR-R-E3, SWR-R-E4, SWR-R-E5						
CCIT-UR-E0003	(x)		(x)							X		X	X	X	X	X	X	X		X			SWR-R-E6, SWR-CR2				OC			

CCIT-UR-E0004																							SWR-R-E6				GI, I, OC, SST	X	X	
Control Requirements																														
CCIT-UR-C0001																							SWR-R-C4							
Data Module Requirements																														
CCIT-UR-DM0001	X	X	X	X	X	X	X	X	X	X	X	X	X	X	X	X	X	X	X	X	X	X	(SWR-R-GUI-1)							
CCIT-UR-DM0002																				X							OC			
CCIT-UR-DM0003																	X													
CCIT-UR-DM0004	X	X	X	X	X	X	X	X	X	X	X	X	X	X	X	X	X	X		X	X	X								
CCIT-UR-DM0005																							SWR-R-DM1							
CCIT-UR-DM0006	X	X	X	X	X	X	X	X	X	X	X	X	X	X	X	X	X	X	X	X	X	X	(SWR-R-DM1)							
CCIT-UR-DM0007																							SWR-R-DM3							
CCIT-UR-DM0008																							SWR-R-DM4							
CCIT-UR-DM0009																							SWR-R-DM5							
CCIT-UR-DM0010																							SWR-R-DM11							
CCIT-UR-DM0011	X	X	X	X	X	X	X	X		X	X	X	X	X	X	X	X			X	X									
CCIT-UR-DM0012																							SWR-R-DM7		C		A, F, LC, I, OC, SM, SST	X	X	
CCIT-UR-DM0013	X	X	X	X	X	X	X	X	X	X	X	X	X	X	X	X	X	X	X	X	X	X	SWR-R-LM4					X	X	
Logic Module Requirements																														

General Logic Module Requirements																														
CCIT-UR-LM0001																							SWR-R-LM1, SWR-R-GUI1							
CCIT-UR-LM0002																							SWR-R-LM5							
CCIT-UR-LM0003																							SWR-R-LM2	S					X	
CCIT-UR-LM0004																								S						
CCIT-UR-LM0005																							SWR-R-LM3							
CCIT-UR-LM0006																													X	
CCIT-UR-LM0007																							SWR-R-GUI2						X	
CCIT-UR-LM0008																													X	
CCIT-UR-LM0051																														X
CCIT-UR-LM0009	X	X	X	X		X	X	X	X	X	X	X	X	X	X	X	X	X		X	X	X	SWR-R-LM4, SWR-R-GUI1		C	0060, 0080, 0090	OC, SM ,SST	X	X	
CCIT-UR-LM0010	X		X	X		X	X	X	X	X	X	X	X	X	X	X	X	X		X	X	X	SWR-R-LM4, SWR-R-GUI1		C	60	OC, SM , SST	X		
CCIT-UR-LM0011																									C		A, F, G, LC, OC, SM, SI, SST		X	
CCIT-UR-LM0012																											F, LC, SM		X	
CCIT-UR-LM0013	X		X																				SWR-R-LM4			80	OC			
CCIT-UR-LM0014																													X	
CCIT-UR-LM0015	X		X				X			X		X	X	X			X			X	X		SWR-R-LM4							

CCIT-UR-LM0016																													X	
CCIT-UR-LM0017																										90	OC ,SST			
CCIT-UR-LM0018																													X	
CCIT-UR-LM0019		X	X					X			X				X			(x)			X		SWR-R-LM4			0080, 0110			X	
CCIT-UR-LM0020																		(x)			X					80				
CCIT-UR-LM0021		X	X								X				X								SWR-R-LM4							
CCIT-UR-LM0022																													X	
CCIT-UR-LM0023																										110				
CCIT-UR-LM0024								X																						
CCIT-UR-LM0025	X	X	X	X	X	X	X	X	X	X	X	X	X	X	X	X	X	X	X	X	X	X	SWR-R-DM2, SWR-R-LM4, SWR-R-GUI1, SWR-R-GUI2		C	50	OC, SM, SST	X	X	
CCIT-UR-LM0026	X	X	X	X	X	X	X	X	X	X	X	X	X	X	X	X	X	X	X	X			SWR-R-DM2, SWR-R-GUI2		C	50	OC, SM, SST	X	X	
CCIT-UR-LM0027																		(x)												
CCIT-UR-LM0028	X			X				X																						
CCIT-UR-LM0029	X			X			X									X														
CCIT-UR-LM0030	X	X	X	X	X	X	X	X	X	X	X	X	X	X		X	X	X	X	X	X		SWR-R-DM2, SWR-R-LM4, SWR-R-GUI1		C		OC, SM, SST	X	X	
CCIT-UR-LM0031					X																									
CCIT-UR-LM0032																X	X													

CCIT-UR-LM0033															X					(X)								X		
CCIT-UR-LM0034																									C					
CCIT-UR-LM0035	X	X	X	X	X	X	X	X	X	X	X	X	X	X	X	X	X	X		X	X	X	SWR-R-LM4	S	C	0040, 0100	OC, SST	X	X	
CCIT-UR-LM0036	X	X	X	X	X	X	X	X		X	X	X	X	X	X	X	X	X		X	X	X	SWR-R-LM4		C	OPR		X	X	
CCIT-UR-LM0037	X																			X			SWR-R-LM4		C					
CCIT-UR-LM0038		X		X	X	X			X	X		X	X	X			X	X			X		SWR-R-LM4		C		SST	X		
CCIT-UR-LM0039		X		X														X		X										
CCIT-UR-LM0040						X						X	X																	
CCIT-UR-LM0041													(x)					X		X							OC			
CCIT-UR-LM0042						X												X		X				S	C					
CCIT-UR-LM0043	X																	(x)								100	OC (SST)			
CCIT-UR-LM0052						X																								X
CCIT-UR-LM0044	X		X	X			X								X	X							SWR-R-GUI5, SWR-R-LM4			OPR				X
CCIT-UR-LM0045	X	X	X					X												X			SWR-R-DM14		C		OC, SST	X		
CCIT-UR-LM0046	X																													
CCIT-UR-LM0047	X							X																						
CCIT-UR-LM0048	X	X							X														SWR-R-LM4		C					
CCIT-UR-LM0049			X																	X										
CCIT-UR-LM0050			(x)																											

Presentation Module	X	X	X		X	X	X		X	X	X	X	X	X	X	X	X	X	X	X	X	X								
CCIT-UR-PM0001																							SWR-R-GUI1							
CCIT-UR-PM0002																							SWR-R-PM4							
CCIT-UR-PM0003																							SWR-R-GUI6							
CCIT-UR-PM0004																							SWR-R-GUI7							
CCIT-UR-PM0005	X	X	X		X	X	X		X	X	X	X	X	X	X	X	X	X	X	X	X	X						X	X	
CCIT-UR-PM0006	X	X	X	X	X	X	X		X	X	X	X	X	X	X	X	X	X	X	X	X	X	SWR-R-GUI6, SWR-R-GUI1		C	OPR	OC, SM, SST	X	X	
CCIT-UR-PM0007																												X	X	
CCIT-UR-PM0008			X	X	X	X	X	X	X	X		X	X	X	X	X		X			X									
CCIT-UR-PM0009																							SWR-R-PM4, SWR-R-GUI1	S			SM			
CCIT-UR-PM0010																							SWR-R-PM5							
CCIT-UR-PM0011																							SWR-R-PM6							
CCIT-UR-De0001																							SWR-R-De1							
CCIT-UR-De0002																							SWR-R-De2							
CCIT-UR-De0003																							SWR-R-De3							
CCIT-UR-De0004																							SWR-R-De4							
CCIT-UR-HS0001																							SWR-R-HS1							

CCIT-UR-P0001																							SWR-R-P1							
CCIT-UR-P0002																							SWR-R-P2							
CCIT-UR-P0003																							SWR-R-P3							
CCIT-UR-P0004																							SWR-R-P4							
CCIT-UR-P0005																							SWR-R-P5							
CCIT-UR-AF0001		X																												
CCIT-UR-AF0002			X												X															

6.2 De-scoped Requirements

In this section, those requirements will be listed which are formerly thought as CCI Toolbox user requirements but were discarded in the course of the user requirements evolution. The reasons for the individual rejections will be listed with the de-scoped requirements in Based on the application areas the Champion Users have done a re-assessment of all requirements and priorization has been given to the requirements during Iteration 7. The Champion Users have especially taken into account the overall acceptance and usage of data formats, grids, etc., in the climate community to prioritize the requirements (see also Appendix G User Requirements (Excel table), in sheet 'URD requirements' column O ('Priority (Champion Users)').

There are four types of priorities 0-3, from low to high priority. As consequence all requirements with priority 3 have to be implemented in the course of the project. Moreover the Champion Users identified requirements which are not widely used and do not belong to the major standards in climate community. Consequently these requirements do not need to be addressed in the development and are set to a lower priority. lists all these requirements with priority 0.

However, these requirements could be implemented in future updates of the software in CCI+.

Table 6-2.

Based on the application areas the Champion Users have done a re-assessment of all requirements and priorization has been given to the requirements during Iteration 7. The Champion Users have especially taken into account the overall acceptance and usage of data formats, grids, etc., in the climate community to prioritize the requirements (see also Appendix G User Requirements (Excel table), in sheet 'URD requirements' column O ('Priority (Champion Users)').

There are four types of priorities 0-3, from low to high priority. As consequence all requirements with priority 3 have to be implemented in the course of the project. Moreover the Champion Users identified requirements which are not widely used and do not belong to the major standards in climate community. Consequently these requirements do not need to be addressed in the development and are set to a lower priority. lists all these requirements with priority 0.

However, these requirements could be implemented in future updates of the software in CCI+.

Table 6-2: List of De-scoped Requirements.

Requirement ID	Reason for rejection
CCIT-UR-GUI0010	*No request of the climate community on printing the current view.*
CCIT-UR-E0004d CCIT-UR-E0004f CCIT-UR-E0004g CCIT-UR-E0004i	*These programming languages are not widely expected and used in climate community.*
CCIT-UR-DM0005d	*GridFTP is not widely used in climate community.*

Requirement ID	Reason for rejection
CCIT-UR-DM0012i	*The XML-input format is not widely expected by the climate community.*
CCIT-UR-LM0011f CCIT-UR-LM0011h CCIT-UR-LM0011i	*These grid options are not widely used in the climate community.*
CCIT-UR-LM0024	*This feature is not necessary anymore.*
CCIT-UR-PM0009b CCIT-UR-PM0009j CCIT-UR-PM0009m CCIT-UR-PM0009n	*These output formats are not widely expected by the climate community.*
CCIT-UR-P0001 CCIT-UR-P0002 CCIT-UR-P0003 CCIT-UR-P0004	*These intelligent installer requirements do not apply. There are not any restrictions in memory in Cate and tile caches that must be configured do not be utilize.*

7 Impact Analysis

This chapter summarises the findings made during the state of the art analysis conducted during Task 1 of the CCI Toolbox project. A more detailed description of the analysis is provided as an external Appendix I to this document called CCI Toolbox URD - State of the Art Analysis [AD-3].

7.1 Impact of Recent Climate Tooling

Components and Libraries

The tools and libraries listed in Table 7-1 shall be considered becoming integral parts of the CCI Toolbox software. If they do not offer a suitable API, the CCI Toolbox shall make use of these tools by calling them via their command-line interfaces or via their web service API, if any.

Table 7-1: Components and Libraries.

Tool	Use Cases
AOCW - Apache Open Climate Workbench (https://climate.apache.org/) is Python library for common model evaluation tasks as well as a flexible RESTful API, which allows integrating the capabilities of the toolkit into their workflow regardless of language and environment by performing HTTP requests.	UC 1, UC 3, UC 4, UC 7, UC 12–17
CDO - Climate Data Operators (https://code.zmaw.de/projects/cdo) may provide numerous operators that the CCI Toolbox can wrap into processors. Can directly contribute solutions to SoW requirements [R-A3] and [R-LM1] to [R-LM5].	All
Cesium (http://cesiumjs.org/) is an ideal technical solution for SoW requirements [R-GUI1] and [R-GUI7].	All
GDAL – Geospatial Data Abstraction Library (http://www.gdal.org/) is a de-factor standard in the geo-spatial software domain. It comprises a comprehensive common data model to perform the translation between the various data formats. The CCI Toolbox may make use of it or not depending on the final implementation technology used. Anyway, before the team implements a new data reader or data writer, GDAL will be consulted for existing functionality.	UC 1, UC 3, UC 4, UC 7, UC 10, UC 12–17
OpenLayers (http://openlayers.org/) is a potential technical solution for SoW requirement [R-GUI1] b) geospatial 2D map display.	All

Design Drivers

The tools and applications presented in Table 7-2 provide valuable concepts that should be considered during the preparation of the technical specification of the CCI Toolbox.

Table 7-2: Design Drivers.

Tool	Use Cases
ADAGUC (http://adaguc.knmi.nl/) has a number of elements in common with the CCI Toolbox and its source code will therefore be further evaluated for reuse during the CCI Toolbox software specification activity. Its JavaScript front end seems a little outdated but still may provide interesting software design concepts and it has a clear overlap with the CCI Toolbox needs.	All
EOSDIS Worldview (https://worldview.earthdata.nasa.gov) is a modern and inspiring EO data visualisation system whose frontend is developed using state of the art web technologies (OpenLayers). Its software design is in line with what the team proposes for the CCI Toolbox.	All
Giovanni 4 (http://giovanni.gsfc.nasa.gov/giovanni/) serves as a very good example for a convenient user interface and may contribute indirectly to the CCI Toolbox design. Also the kind of tools provided and their configuration provides useful input to the technical specification of the CCI Toolbox.	UC 1, UC 3, UC 7, UC 9, UC 10, UC 20
GrADS - The Grid Analysis and Display System (http://grads.iges.org/grads), it is a desktop application which reads, manipulates, and visualizes gridded 4D data, provides a command line interface with a proprietary language and interfaces to Python, Perl, IDL as well as Matlab which are all basic requirements requested for the CCI Toolbox development. In addition to Giovanni, it can provide interesting concepts for the CCI Toolbox software design during the technical specification activity.	UC 1, UC 3, UC 7, UC 9, UC 10, UC 20
KNMI Climate Explorer (https://climexp.knmi.nl/) is a very good reference for a toolbox supporting real life climate analyses and applications. It enables a variety of variables to be plotted as time series and statistical analyses to be carried out. For example, one can click on a (e.g. SST) dataset then make a time series and once the results are returned do point by point correlation maps with another variable.	UC 1, UC 3, UC 9, UC 10, UC 20
UV-CDAT (http://uvcdat.llnl.gov/index.html) may provide very interesting software design concepts for the CCI Toolbox. It uses *VisTrails*, which could serve as a potential engine for the CCI Toolbox' processing graph modelling.	UC 3, UC 4, UC 7, UC 12–17
SNAP (http://step.esa.int/main/) is a comprehensive, state of the art platform for EO data applications whose software design is very similar to the one	UC 3, UC 4, UC 7, UC 12–17

Tool	Use Cases
requested by the SoW. Therefore it provides numerous design patterns and programming models for common geo-spatial data models and APIs.	

Optional Extensions

The following applications (Table 7-3) provide software frameworks that can provide additional functionality to the CCI Toolbox. The CCI Toolbox could make use of them via dedicated, optional plugins, but should not depend on them.

Table 7-3: Optional Extensions.

Tool	Use Cases
COVE - CEOS Visualization Environment (http://www.ceos-cove.org/) provides a web service for current and future satellite instrument coverage areas and coincident calibration opportunities. Letting the CCI Toolbox access the COVE web service API provides an interesting extension to the CCI Toolbox.	UC 1, UC 3, UC 9, UC 10, UC 20, UC 21
SNAP, the Sentinel-1, -2, -3 Toolboxes, and SMOS-Box (http://step.esa.int/main/) provide numerous specific data readers and generic data processors (binning, reprojection, collocation, band-maths, etc.) which could be relevant for the CCI Toolbox. It would allow for interesting synergistic use of CCI data with Level-1 and Level-2 optical, microwave and SAR data.	UC 1, UC 3, UC 9, UC 10, UC 20, UC 21

Supportive Tools

The tools shown in Table 7-4 may be supportive during the development of the CCI Toolbox.

Table 7-4: Supportive Tools.

ncBrowse (http://www.epic.noaa.gov/java/ncBrowse/) can serve as a reference for displaying netCDF and OPeNDAP data and metadata. It may help testing the CCI Toolbox.
Panoply (http://www.giss.nasa.gov/tools/panoply/) can serve as a reference for displaying netCDF and OPeNDAP data. It may also provide inspiration for the design of a convenient user interface.

7.2 Implementation Technologies Recommendation

The conclusion and recommendation from the State of the Art Analyis [AD-3] in combination with the document on hand is that the front end of the CCI Toolbox shall be implemented using web technologies, namely *HTML/CSS/JS* and make use of *electron* to run it as a desktop application. The core of the CCI Toolbox shall be implemented in Python and make extensive use of popular, de-facto standard scientific libraries, such as *NumPy*, *SciPy*, *PIL*, *Matplotlib*, *H5Py*. We also recommend explicitly supporting and exploiting the capabilities of the popular and well established *Climate Data Operators, CDO* and the *Apache Open Climate Workbench, AOCW* through their Python APIs. The front end shall communicate with the Python core via a RESTful web service that runs on the local host. The following screenshot shows the result of a prototype development that uses the recommended architecture:

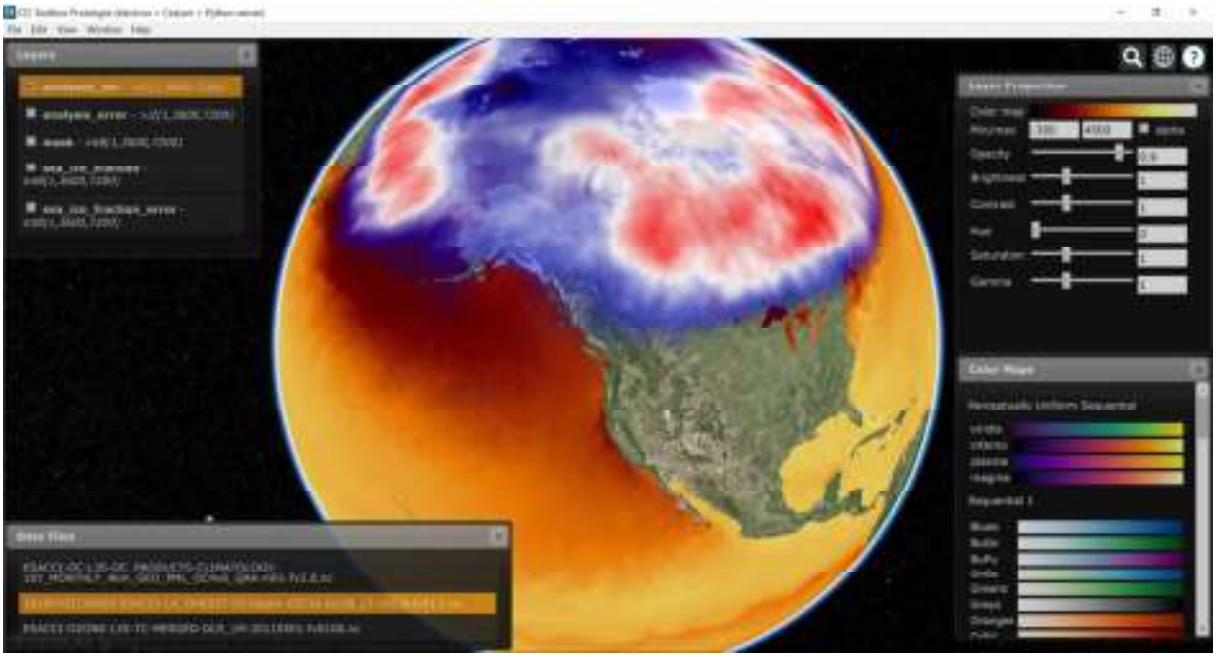

Thanks to this flexible client-server architecture, also the capabilities of *SNAP and the Sentinel Toolboxes* could be exposed to the CCI Toolbox. We would develop another RESTful web service that would allow for ingesting data from all the SNAP-supported sensors and data formats into the CCI Toolbox. Such architecture would also allow for other options, such as running the CCI Toolbox front end as a web application in a usual internet browser. Another set of options arises from the possibility to run the back ends remotely, even multiple instances of them, e.g. in order to load balance and parallelise multiple processing requests.

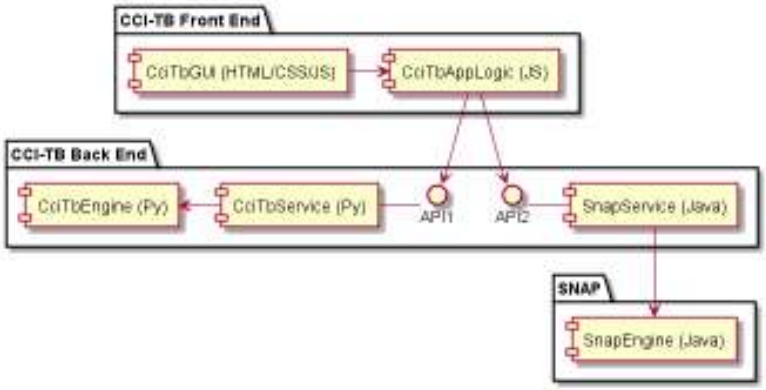

Last but not least, the proposed design would ease exploiting the CCI Toolbox capabilities to other services and applications. For example, the *CCI Data Access Portal* could make use of dedicated CCI Toolbox web service instances. However, the RESTful web service API exposed to the CCI Toolbox frontend has different system specification compared to one used by an external services. In such cases, the CCI Toolbox web services would of course expose a tailored API to the CCI Data Access Portal, e.g. just offering a set of dedicated analysis and processing functions that would operate on datasets located close to the executing process.

Appendix A CCI Toolbox SoW Requirements

This section defines the main CCI Toolbox requirements to be met by the Contractor, and which shall be extended by the Contractor (§4.2) in light of Task activity (§4.3). The Contractor shall comply with ECSS tailoring (Annex A) in meeting these requirements.

Cardinal Requirements

The following Cardinal Requirements shall be met:

[CR-1]

Common Data Model. Each CCI ECV project already defines a data model for its ECV data product(s) through PSD and PUG deliverables. These deliverables define the structure and meaning of data elements for their associated ECV. In contrast, the Common Data Model for the CCI programme will be a single data model capable of representing data from any CCI ECV.

The Contractor shall define the Common Data Model and the toolbox shall provide the means to ingest data products derived from any CCI ECV project into the Common Data Model.

[CR-2]

Extensibility. The toolbox shall provide the means for others to write bespoke functions for the toolbox, which extend the functionality provided by the Contractor.

[CR-3]

Sustainability. The Contractor shall ensure technical sustainability of the toolbox beyond the end of the project, including avoiding vendor lock-in, and that it is capable of coping with future Big Data challenges.

[CR-4]

Reusability. Reuse of existing capabilities within Europe. Maximising the re-use of existing, standard, mature, and freely available community-developed and community-maintained internet technologies. Minimising bespoke developments and use of proprietary software.

[CR-5]

ESA Visual Identity. The toolbox GUI shall adhere to the ESA corporate visual identity manual [RD-31]. Similarly, the options for toolbox output shall include the capability of generating output which adheres to the visual identity. This identity is based on an Agency analysis of its assets, values and aspirations.

[CR-6]

Location Independence. The toolbox shall operate either locally or remotely from both its source of ECV data and output destination. The Contractor shall ensure that the toolbox can access its input data either from the same machine on which the toolbox is operating (for example, a toolbox and its CCI ECV data both residing on the same laptop) or remotely (for example, a toolbox residing on a laptop and accessing its CCI ECV data from a data portal residing elsewhere).

[CR-7]

Modularity. The toolbox architecture shall comprise four modular parts, (i) a logic part on which climate data is processed, (ii) a data part, which provides all data to the logic part, (iii) a presentation part which makes available the output of the logic part, and (iv) a control part responsible for control of the toolbox by the climate user.

[CR-8]

Interoperability. The tool shall be harmonised with the CCI Data Access Portal and other ECV facilities such as those associated with relevant FP7 and CCCS projects.

[CR-9]

Openness. The toolbox shall be open source, using open source OTS products, and itself be made available to a wider community through appropriate open source licensing.

[CR-10]

Portability. The toolbox shall be designed and developed for optimal code portability. All CCI Toolbox software releases shall be cross-platform and cater for Windows, Linux and OS X environments.

Architecture Requirements

The following architecture requirements shall be met:

[R-A1]

The CCI Toolbox shall be comprised of four main modular parts as follows, nevertheless other architectures may be proposed if all requirements can still be met:

[R-A2]

A data module which shall be the single source of data to the logic module. The data module shall be capable of both (i) holding data, and (ii) holding a reference to data which is stored locally or remotely. The toolbox shall provide the means to convert CCI ECV product data from any CCI ECV type into the Common Data Model.

[R-A3]

A logic module housing CCI Tool Processors (called “Processors” henceforth). The logic module shall take its input from the data module and feed its output following processing to a presentation module. All processors must be chainable.

[R-A4]

A presentation module which serves the output of the logic module by a variety of means, comprising data as files on a (shared) location, and which could in future be extended to serve data by means of Web Services.

[R-A5]

A control module providing climate users with the means to control and configure their CCI Toolbox. The command module shall be accessed by an XML-based command language. The command language shall be generated and interpreted for climate user command by (i) a local command line interface, for use by expert users, (ii) a local GUI, for use by both non-expert users and expert users.

Functional Requirements

The following functional requirements shall be met:

<u>Data Module</u>

[R-DM1]

The data module shall provide a means to access all ECV data products and metadata via standard user-community interfaces, protocols, and tools, including at minimum:

a) local file system accessible directory containing CCI ECV data products, GeoTIFF image files and vector information files.

b) remote file system accessible directory containing CCI ECV data products, GeoTIFF image files and vector information files.

c) FTP and HTTP standard file-based access

d) GridFTP

e) OPeNDAP server for NetCDF

f) Web Map Service (WMS)

g) Web Coverage Service (WCS)

h) Web Feature Service (WFS)

i) Obs4MIPs & Earth System Grid Federation (ESGF)

j) CMIP5 and CMIP6

[R-DM2]

The data module shall be capable of sub-setting accessible ECV data by time and space.

[R-DM3]

The data module shall be capable of ingesting ECV data products from a single type of CCI ECV into the Common Data Model.

[R-DM4]

The data module shall be capable of ingesting ECV data products from multiple types of CCI ECVs into a Common Data Model.

[R-DM5]

The data module shall be capable of holding information of any CCI ECV type.

[R-DM6]

The data module shall be capable of ingesting geographic vector files into the common data module or data masking purposes by the logic module.

[R-DM7]

The data module shall be capable of absorbing GeoTIFF files and NetCDF rasters into the common data module for data layering purposes.

[R-DM8]

The Contractor shall maintain the data module to be up to date with any changes in CCI data standards [AD-1], CCI data policy [RD-7] and CCI ECV data products.

[R-DM9]

The Contractor shall define a data management policy defining the location of data once ingested, for example whether cached on the local machine, or holding a reference only.

[R-DM10]

All information in the Common Data Model shall have a unique and location-independent label, so allowing the logic module to use and interrogate data in the data module without concern for its location.

[R-DM11]

The data module shall have the means to attain meta-level status information per ECV type (for example, the total time length of the ECV record, how many products it contains, etc.) and attach this to the Common Data Model.

[R-DM12]

The data module shall be configurable.

[R-DM13]

The data module shall be capable of holding multiple instances of the Common Data Model, each capable of being populated with different data.

[R-DM14]

The data module shall conduct a data product quality control check to ensure full integrity of the Common Data Model following data ingestion. This check shall include the following:

a) Compliance with CCI Data Standards Working Group requirements

b) Correct product version numbering

c) Completeness of data set

d) Uniformity of metadata

[R-DM15]

If a data integrity check should identify a data fault then the tool shall automatically inform the user and support investigation of the issue by:

a) allowing absorption of data into the Common Data Model up to the fault point

b) allowing absorption of data into the Common Data Model from the point of fault onwards, therefore continuing to identify further data faults

c) informing the user of the point of failure in the data

d) provide details of the test case which has identified the fault

[R-DM16]

If a data integrity check should identify a fault then the tool shall automatically inform the Contractor by sending an automated report from the toolbox to a Contractor remote site. The toolbox shall ask the user for permission prior to sending the report.

[R-DM17]

An ESGF plugin shall be built providing a means to directly ingest ESGF data into an appropriately extended Common Data Model.

[R-DM18]

The data module shall be kept up to date with latest versions of CCI data access formats and services

<u>Logic Module</u>

[R-LM1]

The logic module shall include a processor library. Each processor is an algorithm or function capable of manipulating (i) information in a common object model, and (ii) the output of other processors. Each processor shall be modular and uncoupled from other processors.

[R-LM2]

The logic module shall include the means to configure a processor chain comprised of multiple processors from the library to execute on data from the Common Data Model.

[R-LM3]

The logic module shall include the means to configure a processor chain comprised of one processor only from the library to execute on data from the Common Data Model.

[R-LM4]

The processor library shall include the capability to perform the following processing on the Common Data Model independently of ECV type. These functional capabilities shall be augmented by the

Contractor to include processors required to fully comply with user requirements and technical requirements derived from Tasks 1 and 2, respectively.

a) ECV filtering. Filtering the Common Data Model based on ECV type, in the case where an instance of the Common Data Model is holding data from multiple ECVs.

b) Simple transformations including spatial and temporal aggregation, temporal concatenation, sub-sampling, re-projection and interpolation.

c) Geospatial polygon filtering / masking based on parameter input of polygon, cookie cutting.

d) Geospatial point filtering. Given a geospatial point the processor returns all temporal data for that point across time.

e) Temporal filtering. For temporal range. Needs assumptions on if ECV data does not fit within time period, etc.

f) Quality parameter filtering. Filtering of the common object model based on a given quality value per ECV, or a single quality value in the case where all ECV data processed shares the same quality flag in the Common Data Model.

g) Analysis, filtering, exploration and propagation of uncertainties that accompany ECV data.

h) Calculating anomaly information, comparing two ECVs by means and variance.

i) Bespoke ECV parameter filtering. Filtering on any ECV data feature.

j) Gap filling. Suitable algorithms to fill geospatial and temporal gaps in observational data.

k) Ensembles. Calculation of statistics across ensembles of data sets.

l) Time series analyses. Conducting time-series analysis (including Fourier transformations) from a specified subset of Common Data Model.

m) ECV comparison. Given that different ECVs can be represented by different instances of the Common Data Model.

n) GeoTIFF layering. Including layering of geospatial information displaying social and economic information.

o) Delta information between two data sets / instances of the Common Data Model

[R-LM5]

The logic module shall be capable of accommodating ECV-specific processors in cases where the processing is specific to an ECV.

<u>Presentation Module</u>

[R-PM1]

The presentation module shall be capable of presenting output of all processing undertaken by the logic module.

[R-PM2]

The logic module shall place its output on the presentation module without concern as to where it will be physically stored.

[R-PM3]

The presentation module shall serve its output data by means of placing its data on an accessible and security protected region of local disk space.

[R-PM4]

The presentation module shall provide its output data through the following formats:

a) NetCDF file

b) KML file

c) PNG file

d) GeoTIFF file

e) Animation sequence in form of multiple PNGs

f) Animation sequence in form of multiple GeoTIFFs

g) CSV file with ordering befitting diagram type

h) Data file in bespoke file format reflecting the Common Data Model

[R-PM5]

The design of the presentation module shall not prohibit future easy development of the toolbox to provide Web Services.

[R-PM6]

The Contractor shall liaise with the CCI Data Access Portal project and CCI Visualisation Corner project to ensure the CCI Toolbox output is in a form compatible with their needs. Contacts will be provided by ESA at KO.

Extensibility

The following requirements pertaining to extensibility shall be met:

[R-E1]

The CCI Toolbox shall have an architecture allowing for its extension via plug-in capability.

[R-E2]

The CCI Toolbox plug-in capability shall allow for dynamic extension of the Data Module to introduce parsing of NetCDF-based non-CCI CDR types at runtime.

[R-E3]

The CCI Toolbox plug-in capability shall allow for dynamic extension of the Data Module to introduce NetCDF-based non-CCI CDR types to the Common Data Module at runtime.

[R-E4]

The CCI Toolbox plug-in capability shall allow for dynamic extension of the Logic Module to introduce new Processors at runtime.

[R-E5]

The CCI Toolbox plug-in capability shall allow for dynamic extension of the Presentation Module to introduce new forms of presenting output of the logic module at runtime.

[R-E6]

An Application Programming Interface (API) for CCI Toolbox plug-in development shall be provided in:

a) The native language used for CCI Toolbox development

b) Python [RD-8]

[R-E7]

The CCI Toolbox plug-in shall include an adapter to facilitate integration of external tools into the CCI Toolbox.

[R-E8]

The CCI Toolbox plug-in shall be integrated with R [RD-33] and fully expose R functionality via the plugin API, to support extension of the Logic Module.

Data Requirements

The following data requirement shall be met:

[R-Da1]

The toolbox shall abide by a data storage and management policy to be defined by the Contractor. The policy shall include strategies for:

a) the storage of data in the data module for access and manipulation by the logic module.

b) the storage of data in the presentation module for access by the user.

c) warning users prior to committing actions which inhibit the performance of the toolbox.

Control Requirements

The following control requirements shall be met:

[R-C1]

All control of the toolbox shall be via a bespoke XML command language defined by the Contractor.

[R-C2]

The XML command language shall be capable of full control and configuration of the toolbox, including the following:

a) specification of data input / output

b) selection and chaining of Processor(s) for execution

c) specification of initial instances of the Common Data Model.

d) execution of Processors, including a debug mode to step through execution whilst observing the full state of the toolbox.

e) writing, reading and execution of chain recipes (pre-defined processor chains).

[R-C3]

The toolbox shall provide two types of user interface to the XML command language. These interfaces shall each fully cater for the XML command language.

a) Command Line interface (§3.6.1) for expert user machine interaction

b) GUI interface (§3.6.2) for novice & expert user machine interaction

[R-C4]

The user interfaces and APIs shall adhere to the following usage-centred design principles:

a) Consistency in the form, structure and operation of the interface.

b) Intuitiveness such that the user should have to learn only a few, but general and powerful,

concepts that are used throughout all software interfaces.

c) Effectiveness such that no more options nor information should be provided to the user than is absolutely necessary.

d) Suitability of the user interface to each climate user type.

Command Line

[R-CL1]

The command line interface shall provide the means of reading and executing script files written in the XML command language.

[R-CL2]

The command line interface shall provide the means to dump the state of the CCI Toolbox, including content of each Common Data Model instance, into a dump file.

Graphical User Interface (GUI)

[R-GUI1]

The GUI tool shall include the following parts:

a) display of all ECVs with capability to filter

b) geospatial (3D globe and 2D map) display of output with capability to portray vertical profile datasets and select map projection.

c) Temporal filter

d) Processor selection The user shall be able to click and drill down on a processor to define it and view configuration etc.

e) Output format selection

[R-GUI2]

The GUI shall provide the means to

a) load a CCI Toolbox Configuration File, and subsequently apply a state to the GUI which represents the loaded configuration.

b) save the state of the GUI into a CCI Toolbox Configuration File.

c) define an area of geospatial filtering by the climate user drawing a polygon

[R-GUI3]

The GUI shall advise, rather than prohibit, the climate user in their selection of data and processor(s).

[R-GUI4]

The GUI shall advise, rather than prohibit, the climate user in their selection of data-processor(s) combinations.

[R-GUI5]

The GUI shall provide layer stacking capability.

[R-GUI6]

The GUI shall be capable of graphically displaying data from all presentation module file types.

[R-GUI7]

The GUI shall provide the means to display multiple 3D globes side by side, with two displaying climate data and one displaying their delta

[R-GUI8]

The GUI shall allow the output to be used as filtering for the next operation of the toolbox.

The GUI shall allow users to run multiple operations in parallel.

[R-GUI9]

The GUI shall remain responsive where toolbox operation have high input/output demands or cause high CPU loads. If available computing resources are close to their limits, the GUI shall inform the user and offer a mitigation strategy.

[R-GUI10]

All GUI elements shall provide links into dedicated chapters of the online training materials.

[R-GUI11]

The GUI shall provide undo / redo capability making user actions reversible.

[R-GUI12]

The GUI shall provide a concise and clear feedback on all operations.

[R-GUI13]

The GUI shall provide a progress indicator for operations which do not appear to return full control of the interface to the user immediately.

[R-GUI14]

The GUI shall validate user inputs and provide helpful guidance.

Operations Requirements

The following requirements pertaining to operations shall be met:

[R-O1]

If an unrecoverable failure occurs to the CCI toolbox, causing the toolbox to be inoperable by the user or causing the toolbox to exit ungracefully, then a report of the incident shall be automatically sent to a remote machine hosted by the Contractor where (i) consent has been provided by the toolbox user and (ii) a means of remote messaging to the Contractor machine is available. This unrecoverable failure report shall include:

a) Call stack

b) Toolbox version

c) Description of runtime exceptions

[R-O2]

The CCI Toolbox shall have the means to collect user metrics, associated with how the user is using the tool. This provision shall only be activated with express permission from the user. The metrics info to be automatically recorded by the tool shall include processor run configuration, chosen data sets and processors chosen for execution.

Deployment Requirements

The following requirements pertaining to deployment shall be met:

[R-De1]

The source code and binaries shall be made publically available.

[R-De2]

CCI Toolbox installation packs shall be provided for the following target platforms: OS X, Linux and Windows.

[R-De3]

Installation packs shall be provided for easy toolbox installation which shall include the executable, source code and any other required assets. Required assets may be downloadable during the installation process if their size prohibits their practical inclusion in the installation pack.

[R-De4]

The Contractor shall define an appropriate licensing scheme for distribution of the CCI Toolbox, considering the extensibility of the toolbox and technical sustainability.

Hardware and Operating System Requirements

The following hardware and operating system requirements shall be met:

[R-HS1]

The toolbox shall be compatible with conventional 64-bit personal computer operating systems including Linux, Microsoft Windows, and OS X.

[R-HS2]

The minimum hardware requirements of the climate user target platform shall comprise:

• Dual-core CPU

• 4 GB RAM

Security Requirements

The following requirement pertaining to security shall be met:

[R-S1]

The toolbox shall have security measures in place to cater for known vulnerabilities of its underlying platform and virtual machines. These security measures shall include a Contractor secure coding policy which the Contractor shall define.

Performance Requirements

The following performance requirements shall be met:

[R-P1]

The toolbox shall have an intelligent installer that evaluates the system characteristics (including amount of RAM, number of CPU cores, types of hard drives (disk or SSD), and operating system) and sets the parameters affecting toolbox performance to optimized values, for instance:

a) Java VM heap space, Java VM cache size

b) Default tile sizes for random access and deterministic tile caching strategies

c) Setting the locations of important files to appropriate hard drives according to their speed (RAM disk > SSD > hard disk).

[R-P2]

If necessary, the intelligent installer shall execute a parameter optimisation, whereby benchmarks are run to determine what the optimal values of these parameters are on the target system.

[R-P3]

The parameter optimisation shall present the values of the set parameters to the user and offer the possibility for setting the parameters manually.

[R-P4]

It shall be possible to re-run the parameter optimisation after toolbox installation to update the parameter values.

[R-P5]

Assuming an ECV data product consisting of a 10 km x 10 km resolution global raster of double precision geophysical variables hosted on a local disk, the toolbox shall be able to:

a) fully ingest its data into the Common Data Model in a period no longer than 1.0s.

b) apply a dummy algorithm to every data point in the resulting Common Data Model in a period no longer than 0.1s

c) visualise the content of the resulting Common Data Model in a period no longer than 0.5s

[R-P6]

The toolbox should take advantage of performance-boosting technologies, such as multi-core programming and OpenCL-compliant GPUs where available.

Appendix B CCI Open Data Portal Optional User Requirements Relating to Tools

[CCIP-XR-DA-0010]

The user shall be able to define an Area of Interest for data search by uploading a shape file (SHP).

[CCIP-XR-DA-0020]

The CCI Open Data Portal shall offer a basic set of online imaging tools and tools for the generation of graphs (transsects, etc.).

[CCIP-XR-DA-0030]

The CCI Open Data Portal shall offer a facility to generate a time-series plot for a given location and variable.

[CCIP-XR-DA-0040]

The CCI Open Data Portal shall offer online tools to perform server sided data analysis and statistical calculations. ECV specific algorithms and flagging options shall be taken into account.

[CCIP-XR-DA-0050]

The CCI Open Data Portal shall implement a facility to apply a spatial and a band subsetting of the ECV data before download. ECV specific algorithms shall be taken into account.

[CCIP-XR-DA-0060]

The CCI Open Data Portal shall implement a facility to apply regridding of the ECV data before download. ECV specific algorithms shall be taken into account.

[CCIP-XR-DA-0070]

Data resulting from a pre-processing operation shall be formatted according to the CCI file format conventions.

[CCIP-XR-DA-0080]

The CCI Open Data Portal shall implement a functionality that allows server-sided aggregation of data. ECV specific aggregation algorithms shall be taken into account.

[CCIP-XR-DA-0090]

The CCI Open Data Portal shall implement a functionality that performs a matchup dataset generation for a given location and pixel environment.

[CCIP-XR-DA-0100]

The CCI Open Data Portal shall offer data-merging algorithms that combine multiple ECVs into one file on a common raster.

[CCIP-XR-DA-0110]

The CCI Open Data Portal shall offer a temporal concatenation algorithm.

Appendix C Use Cases Template

Table C-1: Use Cases Template.

Use case Number						
Use case title						
Use case objective						
User Group						
1	**2**	**3**	**4**	**5**	**6**	**7**
Expert Level						
High Level Expert User		**Expert Level User**		**Non – Expert User**		
Description of Use case						
Item	**Aim**		**Story**		**Required features**	
	-		-			
	-		-			
	-		-			
	-		-			
	-		-			
	-		-			

Appendix D User Requirements Evolution

CCI-CMUG 6th Integration Meeting (14–16/03/2016) and Planet Symposium 2016 (09–13/05/2016)

At both events, the CCI Toolbox was promoted. Users were informed about the Toolbox in general and were able to have a look at the Use Cases and User Requirements gathered so far. The feedback from the users showed that their needs are generally covered by the URD as no further requirements were raised.

Regarding the User Requirements Questionnaires which where disseminated in the course of the two events, two replies were received from participants of the CMUG integration meeting. Most of the listed requirements were already part of the URD. Nevertheless, some new points arose, which were included in the following way:

Requirement ID	Added feature	Description
CCIT-UR-E0004 i)	C+	“C+” was added to the list of example programming languages
CCIT-UR-DM0013 a)	… and extraction of: a) Parts of variables contained in a file (quality flags, cloud mask etc.)	Besides filtering for variables etc., also extraction of parts of variables should be possible
CCIT-UR-CCIT-UR-LM0010 c)	co-registration	“Co-registration” was added to the list of grid adaption examples
CCIT-UR-LM0026 a)	Transcom regions	“Transcom regions” was added to examples for list of main areas for geospatial subsetting
CCIT-UR-LM0036 f)	frequency filtering to separate different time-scales of variability	“frequency filtering to separate different time-scales of variability" was added to list of statistic filtering examples
CCIT-UR-LM0036 i)	Hovmöller analysis	“Hovmöller analysis” was added to examples for univariate descriptive statistics
CCIT-UR-LM0045	… , including non-binary flagging.	User comment “Flags indicating "good" and "bad" data are a minimum, more complex flagging is useful when consistently applied.”

Requirement ID	Added feature	Description
CCIT-UR-PM0005	…, including: a) Quick-look figures b) More elaborated, customizable figures.	The requirement to generate figures of different kinds was specified
CCIT-UR-PM007k	Significance in correlation plots/maps	Besides legends, annotations etc. it is very useful to have to option to highlight significant values in correlation plots or maps.

Obliging the wish for Hovmöller analysis, a new Use Case comprising Hovmöller plots of Cloud and Aerosol CCI data was constructed (Use Case #22, including exemplary workflow and timeliness).

Although the users asked for a possibility to work on level 2 data, this request was not included as the CCI Toolbox is intended to primarily serve for the manipulation of level 3 CCI data. Nevertheless, as CR-8 (see Appendix A CCI Toolbox SoW Requirements) asks for "Interoperability. The tool shall be harmonised with the CCI Data Access Portal and other ECV facilities such as those associated with relevant FP7 and CCCS projects.", a link to other toolboxes like BEAM or SNAP will ensure the ability to work on level 2 data.

Technical Specification of Use Case #9

Furthermore, during the technical specification of UC9, it appeared to make more sense to geometrically adjust the datasets by means of co-registration instead of re-projection. As it is the purpose of the adjustment to have all data on the same grid, it suffices to modify one dataset to fit the grid of the other one.

Requirement ID	Added feature	Description
CCIT-UR-LM0010 c)	co-registration	“Co-registration” was added to the list of grid adaption examples

The timeliness of UC9 was modified in a way that an adaption effort “+” was assigned to co-registration.

According to the listed changes concerning the User Requirements, also the Requirements Traceability Matrix was updated.

Appendix E Exemplary Use Case Workflows

Use Case #1 IPCC Support

Use Case #2 School Seminar Climate and Weather

Use Case #3 Glaciers and Sea Level Rise

Use Case #4 Extreme Weather Climate Service

Use Case #5 School Seminar Glacier

Use Case #6 Teleconnection Explorer

Use Case #7 Regional Cryosphere Climate Service

Use Case #8 World Glacier Monitoring Service

Use Case #9 Relationships between Aerosol and Cloud ECV

Use Case #10 Scientific Investigation of NAO Signature

Use Case #11 School Project on Arctic Climate Change

Use Case #12 Marine Environmental Monitoring

Use Case #13 Drought Occurrence Monitoring in Eastern Africa

Use Case #14 Drought Impact Monitoring and Assessment in China

Use Case #15 Renewable Energy Resource Assessment with regard to Topography

Use Case #16 Monitoring Tropical Deforestation

Use Case #17 Stratospheric Ozone Monitoring and Assessment

Use Case #18 Examination of ENSO and its impacts based on ESA CCI data

Use Case #19 GHG Concentrations over Europe

Use Case #19a Ozone Concentrations over the Pole

Use Case #20 Examination of North Eastern Atlantic SST Projections

Use Case #21 Investigation of Relationships between Ice Sheet ECV Parameters

E.1 Use Case #1 IPCC Support

User Characteristics: User Level 1 High-level expert user (User Communities 1 international climate research community and 5 international bodies)

Problem Definition:

In its Summary for Policy Makers, the fifth IPCC Assessment Report [RD-2] shows four ECVs of the marine environment as indicators of a changing climate. This figure depicting the "(a) extent of Northern Hemisphere March-April (spring) average snow cover; (b) extent of Arctic July-August-September (summer) average sea ice; (c) change in global mean upper ocean (0–700 m) heat content aligned to

2006–2010, and relative to the mean of all datasets for 1970; (d) global mean sea level relative to the 1900–1905 mean of the longest running dataset, and with all datasets aligned to have the same value in 1993, the first year of satellite altimetry data" in the form of annual values with available uncertainties expressed as shadings, could also constitute a CCI Toolbox product.

For a second figure, change in sea ice extent and ocean heat content are calculated on a regional basis and contrasted with land surface temperature anomalies. Additionally, global averages of land surface, land and ocean surface temperature as well as ocean heat content changes are presented. All observational time series are compared with model output. This could have been a CCI Toolbox Operation, too.

Exemplary Workflow Step 1:

All

a) The user selects several CCI ECV (geophysical quantities: sea ice extent, sea water temperature, corrected sea surface height) as well as non-CCI ECV (geophysical quantity: snow cover from GlobSnow) data products from a checklist.

b) The user selects validation datasets.

c) The user selects the "Data Validation" Operation from the Operation Category "Evaluation and Quality Control".

d) The user selects options to validate ECV data by means of validation datasets.

e) The user executes the Operation.

f) The Toolbox assesses the deviation of the ECV dataset from the validation dataset and outputs measures for evaluation.

g) The user selects the "Visual Consistency Checks" Operation from the Operation Category "Evaluation and Quality Control".

h) The user selects options (histogram).

i) The user executes the Operation.

j) The Toolbox plots the histograms of ECV and validation data and calculates a measure for histogram deviations.

k) The user selects the Operation "Resampling" from the Operation Category "Geometric Adjustment".

l) The user selects the particular options (Resampling method: cubic convolution, requested grid, propagation of uncertainties analysis, apply to multiple data products).

m) The user executes the Operation.

n) The Toolbox performs a resampling of the datasets onto the chosen coordinate system.

o) The user selects the Operation "Geospatial Gap Filling" from the Operation Category "Geometric Adjustment".

p) The user selects the particular options (Method: nearest neighbour, apply to multiple data products).

q) The user executes the Operation.

r) The Toolbox performs a geospatial gap filling of the dataset(s).

Snow cover

s) The user selects the Operation “Spatial Subsetting” from the Operation Category “Subsetting and Selections”.

t) The user selects options (Northern Hemisphere from a list of main regions).

u) The user executes the Operation.

v) The Toolbox creates a spatial subset of the data containing the Northern Hemisphere.

w) The user selects the „Area Estimation” Operation from the Operation Category “Band Arithmetics and Statistics + GIS Tools”.

x) The user selects particular options.

y) The Toolbox generates a time series of the NH snow covered area.

z) The user selects the Operation “Seasonal Values” from the Operation Category “Calculations”.

aa) The user selects the particular options.

bb) The user executes the Operation.

cc) The Toolbox generates a new time series consisting of the M-A mean of a year only.

Sea Ice

dd) The user selects the Operation “Spatial Subsetting” from the Operation Category “Subsetting and Selections”.

ee) The user selects options (Arctic from a list of main regions).

ff) The user executes the Operation.

gg) The Toolbox creates a spatial subset of the data containing the Arctic.

hh) The user selects the Operation “Grid Cell Class Extraction” from the Operation Category “Subsetting and Selections”.

ii) The user selects options to extract Sea Ice from SI, OC and SST (apply to multiple data products).

jj) The user executes the Operation.

kk) The Toolbox generates three new data sets consisting of sea ice coverage (Boolean).

ll) The user selects the Operation “Spatial Subsetting” from the Operation Category “Subsetting and Selections”.

mm) The user selects options (geospatial area of interest on a rotatable global).

nn) The user executes the Operation.

oo) The Toolbox creates a spatial subset of the data containing the selected region only.

pp) The user selects the Operation “Animated Map” (Operation Category “Visualisation”).

qq) The user selects the particular options (multiple data products as transparent layers).

rr) The user executes the Operation.

ss) The Toolbox opens an animated but interruptible map showing the sea ice extent of the different data sets in different colours.

tt) The user selects the “Area Estimation” Operation from the Operation Category “Band Arithmetics and Statistics + GIS Tools”.

uu) The user selects particular options (apply to multiple data products).

vv) The Toolbox generates three time series of the Arctic sea ice extent.

ww) The user selects the “Seasonal Values” Operation from the Operation Category “Calculations”.

xx) The user selects the particular options (apply to multiple data products).

yy) The user executes the Operation.

zz) The Toolbox generates new time series consisting of the J-J-A mean of a year only.

aaa) The user selects the Operation “Multi Dataset Mean” (Operation Category “Ensemble Statistics”).

bbb) The user selects options.

ccc) The user executes the Operation.

ddd) The Toolbox generates a new time series consisting of the mean sea ice extent based on SI, OC, and SST.

eee) The user selects the Operation “Uncertainties and Spreads” (Operation Category “Ensemble Statistics”).

fff) The user selects the corresponding options regarding uncertainty definition.

ggg) The user executes the Operation.

hhh) The Toolbox generates new time series consisting of maximum and minimum values of sea ice extent based on SI, OC, and SST.

Upper Ocean Heat Content

iii) The user selects a plug-in or the API to include a model for upper ocean heat derivation from sea water temperature.

jjj) The user inputs values or modifies the script (optional).

kkk) The user executes the plug-in/script

lll) The plug-in generates a new data set.

Upper Ocean Heat Content and Sea Level

mmm) The user selects the Operation “Arithmetic Mean” (Operation Category “Univariate Descriptive Statistics”, Operation Subcategory “Location Parameters”).

nnn) The user selects options (spatial mean).

ooo) The user executes the Operation.

ppp) The Toolbox generates new time series consisting of global mean values.

qqq) The user selects the Operation “Anomalies” (Operation Category “Univariate Descriptive Statistics”, Operation Subcategory “Temporal Comparison”).

rrr) The user selects options (reference period).

sss) The user executes the Operation.

ttt) The Toolbox generates new time series consisting of global anomalies.

Each

uuu) The user selects the Operation “Time Series Plot” (Operation Category “Visualisation”).

vvv) The user selects options.

www) The user selects the time series to be plotted.

xxx) The user executes the Operation.

yyy) The Toolbox plots time series including uncertainties where assessed on the screen (with lines for each mean in case of more than one source per plots).

Exemplary Workflow Step 2:

a) The user repeats the steps as before but selects other regions.

b) The user selects non-CCI ECV (geophysical quantity: land surface temperature from GlobTemperature) as well as model (geophysical quantities: sea ice extent, upper ocean heat content, land surface temperature, sea surface temperature) data products from a checklist.

c) The user selects the Operation “Resampling” from the Operation Category “Geometric Adjustment”.

d) The user selects the particular options (Resampling method: cubic convolution, requested grid, propagation of uncertainties analysis, apply to multiple data products).

e) The user executes the Operation.

a) The Toolbox performs a resampling of the datasets onto the chosen coordinate system. The user selects the Operation “Geospatial Gap Filling” from the Operation Category “Geometric Adjustment”.

b) The user selects the particular options (Method: nearest neighbour).

c) The user executes the Operation.

d) The Toolbox performs a geospatial gap filling of the dataset(s).

f) The user selects validation datasets.

g) The user selects the “Data Validation” Operation from the Operation Category “Evaluation and Quality Control”.

h) The user selects options to validate ECV data by means of validation datasets (apply to multiple data products).

i) The user executes the Operation.

j) The Toolbox assesses the deviation of the ECV dataset from the validation dataset and outputs measures for evaluation.

k) The user selects the “Visual Consistency Checks” Operation from the Operation Category “Evaluation and Quality Control”.

l) The user selects options (histogram, apply to multiple data products).

m) The user executes the Operation.

n) The Toolbox plots the histograms of ECV and validation data and calculates a measure for histogram deviations.

For observational and model data

o) The user selects the Operation „Band Arithmetics” (Operation Category “Band Arithmetics and Statistics + GIS Tools”) or a user-programmed plug-in /API programme.

p) The user choses options or enters calculation specifications to merge SST and LST.

q) The user executes the Operation.

r) The plug-in or Operation generates a new SST/LST dataset.

s) The loads a shape file.

t) The user selects the Operation “Clipping” (Operation Category “Band Arithmetics and Statistics + GIS Tools”).

u) The user selects options to extract a geospatial area of interest by utilizing the shape file as a mask feature (global or regional).

v) The user executes the Operation.

w) The Toolbox creates a new dataset comprising only those grid cells of the SST/LST dataset which lie inside the boundaries of the vector data as defined by the shape file.

x) The user selects the Operation “Arithmetic Mean” (Operation Category “Univariate Descriptive Statistics”, Operation Subcategory “Location Parameters”).

y) The user selects options (spatial mean).

z) The user executes the Operation.

aa) The Toolbox generates new time series consisting of regional mean values.

For model data

bb) The user selects the Operation “Multi Dataset Mean” (Operation Category “Ensemble Statistics”)

cc) The user executes the Operation.

dd) The Toolbox generates new time series comprising the ensemble mean.

ee) The user selects the Operation “Uncertainties and Spreads” (Operation Category “Ensemble Statistics”)

ff) The user executes the Operation.

gg) The Toolbox generates new time series comprising the ensemble minimum and maximum.

For both together

hh) The user selects the Operation “Time Series Plot” from the Operation Category “Visualisation”.

ii) The user selects options (multiple data products).

jj) The user executes the Operation.

kk) The Toolbox plots time series on the same axes.

ll) The user saves figures on a local disk.

mm) The user selects the Operation “Product-Moment Correlation (Pearson)” (Operation Category “Data Intercomparison”, Operation Subcategory “Correlation Analysis”).

nn) The user selects options (scatter-plot).

oo) The user executes the Operation.

pp) The Toolbox plots a scatter-plot and correlation statistics on the screen.

qq) The user saves figures and statistics on a local disk.

E.2 Use Case #2 School Seminar Climate and Weather

User Characteristics: User Level 3 non-expert User (User Community 7 knowledgeable public)

Problem Definition:

As a school project, measurements of air temperature, precipitation, and wind speed from the school-run weather station shall be compared to long-term climate data in the form of ESA’s CCI Cloud and Soil moisture climatological means. Finally, it shall be assessed if the measurements are within the climate means for the particular location.

Exemplary Workflow:

a) The user selects CCI ECV data products from a checklist (geophysical quantities: cloud cover, surface soil moisture volumetric absolutes).

b) The user inputs self-generated data from a local disk (geophysical quantities: air temperature, precipitation, wind speed).

c) The user selects the Operation “Spatial Subsetting” from the Operation Category “Subsetting and Selections”.

d) The user selects options (point, entering of geographical coordinates).

e) The user executes the Operation.

f) The Toolbox creates a spatial subset of the data containing the requested point of interest.

g) The user selects the Operation “Temporal Subsetting” from the Operation Category “Subsetting and Selections”.

h) The user selects start and end years for a reference time period.

i) The user executes the Operation.

j) The Toolbox creates a temporal subset of the data.

k) The user selects the Operation “Arithmetic Mean” (Operation Category “Univariate Descriptive Statistics”, Operation Subcategory “Location Parameters”).

l) The user selects options (temporal means, propagation of uncertainties, apply to multiple data products).

m) The user executes the Operation.

n) The Toolbox calculates the climatological mean regarding the CCI data.

o) The user selects the Operation “Detection of Outliers” (Operation Category “Univariate Descriptive Statistics”, Operation Subcategory “Filtering”).

p) The user selects options (apply to multiple data products).

q) The user executes the Operation.

r) The Toolbox detects outliers (and substitutes them by filtering).

s) The user selects the “Arithmetics” Operation from the Operation Category “Calculations”

t) The user enters calculation specifications for the deviation from the climatological mean.

u) The user executes the Operation.

v) The Toolbox calculates a new time series comprising the anomaly of the in-situ measurements with respect to the long term CCI data mean.

w) The user selects the “Time Series Plot” Operation (Operation Category “Visualisation”).

x) The user selects options.

y) The Toolbox generates a line plot showing CCI and meteorological station data as well as the calculated anomaly information.

z) Additional: repetition with other geospatial areas (with/without climatological mean calculation).

Notes: This could also be a user visiting the website of a meteorological station and the website has included a widget that accesses the Toolbox to perform the steps described.

E.3 Use Case #3 Glaciers and Sea Level Rise

User Characteristics: User Level 1 High-level expert User (User Communities 1 international climate research community, 2 earth system science community and 4 earth system reanalysis community)

Problem Definition:

A scientist wants to know: “What is the contribution of all glaciers to global sea level rise over a given time period in the future?”.

Exemplary Workflow:

a) The user selects CCI ECV data products from a checklist (geophysical quantities: glacier area, corrected sea surface height).

b) The user selects in-situ data products from a checklist or inputs data from a local disc / WGMS (geophysical quantities: glacier area, corrected sea surface height).

c) The user selects a region and time period of interest

d) The toolbox calculates the total area for this region (from a)

e) The toolbox calculates the mean mass balance of this region and for this period (from b)

f) The toolbox multplies d) with e) and provides all results

g) The user selects the Operation “Time Series Plot” from the Operation Category “Visualisation”.

h) The user selects particular options (multiple data products).

i) The user executes the Operation.

j) The Toolbox displays a time series plot showing mass balance fluctuation.

k) The user saves the output.

l) Additional: selection/input of validation data, “Product-Moment Correlation Analysis” Operation (Operation Category “Data Intercomparison”, Operation Subcategory “Correlation Analysis”).

E.4 Use Case #4 Extreme Weather Climate Service

User Characteristics: User Level 2 expert user (User Community 3 climate service developers and providers, providing information for User Community 7 knowledgeable public)

Problem Definition:

In March 2012, the article “US heatwave may have been made more likely by global warming” by Andrew Freedman, senior science writer for Climate Central, was published in The Guardian [RD-3]. He wrote about extreme events, using the example of the increased occurrence of heat waves in March in relation to Greenhouse Gases. The article included a map of temperature anomalies over North America compared to the 2000–2001 reference period to illustrate this. Furthermore, several

statements which require analysis of large data sets and time series were made. The CCI Data and CCI Toolbox could have supported this analysis.

Exemplary Workflow:

a) The user selects CCI ECV data products from a checklist (geophysical quantity: e.g. column-averaged dry air mole fraction of CO2).

b) The user selects non-CCI data products from a checklist (geophysical quantity: land surface temperature e.g. from GlobTemperature).

c) The user selects the Operation “Co-Registration” from the Operation Category “Geometric Adjustment”.

d) The user selects the particular options (Co-Registration method: spline, propagation of uncertainties analysis).

e) The user executes the Operation.

f) The Toolbox performs a co-registration of one dataset onto the coordinate system of the other.

g) The user selects the Operation “Spatial Subsetting” from the Operation Category “Subsetting and Selections”.

h) The user selects options (North America from a list of main regions).

i) The user executes the Operation.

j) The Toolbox creates a spatial subset of the data containing N America.

k) The user selects the Operation “Temporal Subsetting” from the Operation Category “Subsetting and Selections”.

l) The user selects start and end years for a reference time period.

m) The user executes the Operation.

n) The Toolbox creates a temporal subset of the data.

o) The user selects the “Seasonal Values” Operation (Operation Category “Calculations”)

p) The user selects options (season = February).

q) The user executes the Operation.

r) The Toolbox creates a new time series comprising February values only.

s) The user selects the “Arithmetic Mean” Operation (Operation Category “Univariate Descriptive Statistics”, Operation Subcategory “Location Parameters”).

t) The user selects options (temporal mean).

u) The user executes the Operation.

v) The Toolbox calculates the temporal mean of all Februaries inside the reference period.

w) The user selects the “Percentiles” Operation (Operation Category “Univariate Descriptive Statistics”, Operation Subcategory “Location Parameters”).

x) The user selects options.

y) The user executes the Operation.

z) The Toolbox calculates the percentiles of the time series.

aa) The user selects the “Anomalies” Operation (Operation Category “Univariate Descriptive Statistics”, Operation Subcategory “Temporal Comparison”)

bb) The user selects options.

cc) The user executes the Operation.

dd) The Toolbox calculates anomalies.

ee) The user selects the Operation “Map” from the Operation Category “Visualisation”.

ff) The user selects options.

gg) The Toolbox creates a map (including legend, land contours etc.) depicting T anomalies over N America.

hh) The user saves graphics and data to a local disk.

ii) The user selects the Operation “Arithmetic Mean” (Operation Category “Univariate Descriptive Statistics”, Operation Subcategory “Location Parameters”).

jj) The user selects options (spatial mean, apply to multiple data products).

kk) The user executes the Operation.

ll) The Toolbox calculates spatial means for GHG concentrations (global) and temperature over N America.

mm) The user selects the Operation “Product-Moment Correlation (Pearson)” (Operation Category “Data Intercomparison”, Operation Subcategory “Correlation Analysis”).

nn) The user selects options (time series plot).

oo) The user executes the Operation.

pp) The Toolbox displays a time series plot (showing GHG and temperature evolution on the same axis) and correlation statistics on the screen.

qq) The user saves the output on a local disc.

E.5 Use Case #5 School Seminar Glacier

User Characteristics: User Level 3 non-expert user (User Community 6 undergraduate and postgraduate students)

Problem Definition:

A student (at school) wants to know for a seminar paper: “What is the largest glacier in the world, and how has this glacier changed in the past compared to other glacierized regions?”

Exemplary Workflow:

a) The user selects/inputs data products (RGI, geophysical quantity: glacier area).

b) The user selects the Operation “Spatial Subsetting” from the Operation Category “Subsetting and Selections”.

c) The user selects options (globe).

d) The user executes the Operation.

The Toolbox redefines the area of interest.

e) The user selects the “Percentiles and Median” Operation (Operation Category “Univariate Descriptive Statistics”, Operation Subcategory “Location Parameters”).

f) The user selects options (sorting only).

g) The user executes the Operation.

h) The Toolbox sorts all glaciers for size.

i) The user selects, extracts, and saves the data for the largest glacier.

j) The user selects/inputs WGMS fluctuation data.

k) Or the user selects the Operation “Extract by Attributes” (Operation Category “Band Arithmetics and Statistics + GIS Tools”)

l) The user selects the afore-extracted glacier as criterion.

m) The user executes the Operation.

n) The Toolbox creates a new dataset comprising only the fluctuation data belonging to the chosen glacier or shows the glaciers with fluctuation data close to it.

o) The user selects the “Anomalies” Operation (Operation Category “Univariate Descriptive Statistics”, Operation Subcategory “Temporal Comparison”)

p) The user selects options (e.g. relative changes compared to reference period)

q) The user executes the Operation.

r) The Toolbox calculates a time series comprising relative changes compared to a reference period.

s) The user saves the output as a PDF file to a local disk.

E.6 Use Case #6 Teleconnection Explorer

User Characteristics: User Level 3 non-expert user (User Community 6 undergraduate and postgraduate students)

Problem Definition:

As part of a project on climatic teleconnection, a student investigates how El Niño-Southern Oscillation (ENSO) relates to monsoon rainfall. A result could be a plot showing the sliding correlation between Indian Summer Monsoon Rainfall (ISMR) and El Niño3.4 SST anomalies [RD-4]. A more sophisticated version of this task would be to calculate the Multivariate ENSO Index (MEI, [RD-5],

[RD-6]). Additionally, also the comparison of the ENSO index with other CCI datasets (Cloud, Fire, …) would be interesting.

Exemplary Workflow:

a) The user selects CCI ECV data products from a checklist (geophysical quantities: sea surface temperature, surface soil moisture volumetric absolutes).

b) The user selects the Operation “Co-Registration” from the Operation Category “Geometric Adjustment”.

c) The user selects the particular options (Co-Registration method: spline, propagation of uncertainties analysis).

d) The user executes the Operation.

e) The Toolbox performs a co-registration of one dataset onto the coordinate system of the other.

f) The user selects the Operation “Temporal Subsetting” from the Operation Category “Subsetting and Selections”.

g) The user selects start and end years of a time period.

h) The user executes the Operation.

i) The Toolbox creates a temporal subset of the data.

j) The user selects the Operation “Index Calculation” (Operation Category “Calculations”) or a user-supplied plugin/API.

k) The user selects the requested ENSO index from a list of pre-defined indices regarding the region selected.

l) The user executes the Operation.

m) The Toolbox/plug-in generates an index time series.

n) The user selects the Operation “Arithmetics” (Operation Category “Calculations”).

o) The user enters the calculation specification (log transformation of SM data).

p) The user executes the Operation.

q) The Toolbox generates a new dataset.

r) The user selects the Operation “Long-term Average” (Operation Category “Univariate Descriptive Statistics”, Operation Subcategory “Comparison”).

s) The user selects options (preserve seasonality, reference period)

t) The user executes the Operation.

u) The Toolbox generates a new dataset comprising a one-year time series of the long-term average of the data.

v) The user selects the Operation “Anomalies” (Operation Category “Univariate Descriptive Statistics”, Operation Subcategory “Comparison”).

w) The user enters the calculation specification (absolute anomaly of log transformed SM data with respect to mean of reference period).

x) The user executes the Operation.

y) The Toolbox generates a new dataset.

z) The user selects the Operation “Product-Moment Correlation (Pearson)” (Operation Category “Data Intercomparison”, Operation Subcategory “Correlation Analysis”).

aa) The user selects options (map, table, 30 days lag time).

bb) The user executes the Operation.

cc) The Toolbox generates a map showing the correlation between the ENSO index and soil moisture as well as a table comprising the location-specific correlation coefficients including correlation flags.

dd) The user selects the Operation “Spatial Subsetting” from the Operation Category “Subsetting and Selections”.

ee) The user selects options (selecting of a point location in SE Asia).

ff) The user executes the Operation.

gg) The Toolbox creates a spatial subset containing the point data.

hh) The user selects the Operation “Product-Moment Correlation (Pearson)” (Operation Category “Data Intercomparison”, Operation Subcategory “Correlation Analysis”).

ii) The user selects options (time series plot, 30 days lag time).

jj) The user executes the Operation.

kk) The Toolbox generates a time series plot and correlation statistics.

ll) The user saves images and underlying data on a local disk.

More sophisticated version:

a) The user selects CCI (geophysical quantities: sea surface temperature, cloud cover) and non-CCI (geophysical quantities: sea level pressure, zonal surface wind components, meridional surface wind components, surface air temperature) ECV data products from a checklist.

b) The user selects the Operation “Co-Registration” from the Operation Category “Geometric Adjustment”.

c) The user selects the particular options (Co-Registration method: spline, propagation of uncertainties analysis).

d) The user executes the Operation.

e) The Toolbox performs a co-registration of one dataset onto the coordinate system of the other.

f) The user selects the Operation “Spatial Subsetting” from the Operation Category “Subsetting and Selections”.

g) The user selects options (drawing of a polygon).

h) The user executes the Operation.

i) The Toolbox creates a spatial subset containing data of the selected region.

j) The user selects the Operation “Temporal Subsetting” from the Operation Category “Subsetting and Selections”.

k) The user selects start and end years of a time period.

l) The user executes the Operation.

m) The Toolbox creates a temporal subset of the data.

n) The user selects the “Seasonal Values” Operation (Operation Category “Calculations”)

o) The user selects options (bi-monthly seasons, sliding).

p) The user executes the Operation.

q) The Toolbox creates 12 new time series per geophysical quantity comprising bi-monthly values.

r) The user selects the Operation “EOF Analysis” from the Operation Category “Complex Computations”

s) The user selects options (combined EOF analysis, correlation matrix, …; apply to multiple data products)

t) The user executes the Operation.

u) The Toolbox performs a combined EOF analysis for each of the 12 bi-monthly seasons.

v) The user selects the “Arithmetics” Operation from the Operation Category “Calculations”

w) The user enters calculating specifications for combining the 12 separate time series (JF, FM, MA, …) of the first principal component to one consecutive dataset.

x) The user executes the Operation.

y) The Toolbox calculates a new time series.

z) The user selects the Operation “Arithmetics” (Operation Category “Calculations”).

aa) The user enters the calculation specification (log transformation of SM data).

bb) The user executes the Operation.

cc) The Toolbox generates a new dataset.

dd) The user selects the Operation “Long-term Average” (Operation Category “Univariate Descriptive Statistics”, Operation Subcategory “Comparison”).

ee) The user selects options (preserve seasonality, reference period)

ff) The user executes the Operation.

gg) The Toolbox generates a new dataset comprising a one-year time series of the long-term average of the data.

hh) The user selects the Operation “Anomalies” (Operation Category “Univariate Descriptive Statistics”, Operation Subcategory “Comparison”).

ii) The user enters the calculation specification (absolute anomaly of log transformed SM data with respect to mean of reference period).

jj) The user executes the Operation.

kk) The Toolbox generates a new dataset.

ll) The user selects the Operation “Product-Moment Correlation (Pearson)” (Operation Category “Data Intercomparison”, Operation Subcategory “Correlation Analysis”).

mm) The user selects options (map, table, 30 days lag time).

nn) The user executes the Operation.

oo) The Toolbox generates a map showing the correlation between the ENSO index and soil moisture as well as a table comprising the location-specific correlation coefficients including correlation flags.

pp) The user selects the Operation “Spatial Subsetting” from the Operation Category “Subsetting and Selections”.

qq) The user selects options (selecting of a point location in SE Asia).

rr) The user executes the Operation.

ss) The Toolbox creates a spatial subset containing the point data.

tt) The user selects the Operation “Product-Moment Correlation (Pearson)” (Operation Category “Data Intercomparison”, Operation Subcategory “Correlation Analysis”).

uu) The user selects options (time series plot, 30 days lag time).

vv) The user executes the Operation.

ww) The Toolbox generates a time series plot and correlation statistics.

xx) The user saves images and underlying data on a local disk. In doing this, the user selects TIFF and CSV as file formats.

Additional:

a) The user selects CCI ECV data products from a checklist (geophysical quantities e.g. burned area, cloud cover, phytoplankton chlorophyll-A concentration, sea ice concentration).

b) The user selects the Operation “Co-Registration” from the Operation Category “Geometric Adjustment”.

c) The user selects the particular options (Co-Registration method: spline, propagation of uncertainties analysis, apply to multiple data products).

d) The user executes the Operation.

e) The Toolbox performs a co-registration of one dataset onto the coordinate system of the other.

f) The user selects the Operation “Spatial Subsetting” from the Operation Category “Subsetting and Selections”.

g) The user selects options (drawing of a polygon).

h) The user executes the Operation.

i) The Toolbox creates a spatial subset containing data of the selected region.

j) The user selects the Operation “Temporal Subsetting” from the Operation Category “Subsetting and Selections”.

k) The user selects start and end years of a time period.

l) The user executes the Operation.

m) The Toolbox creates a temporal subset of the data.

n) The user selects the Operation “Arithmetic Mean” (Operation Category “Univariate Descriptive Statistics”, Operation Subcategory “Location Parameters”).

o) The user selects options (temporal mean, propagation of uncertainties, apply to multiple data products).

p) The user executes the Operation.

q) The Toolbox calculates the temporal mean for every grid cell in the selected area.

r) The user selects the Operation “Long-term Average” (Operation Category “Univariate Descriptive Statistics”, Operation Subcategory “Comparison”).

s) The user selects options (preserve seasonality, reference period).

t) The user executes the Operation.

u) The Toolbox generates a new dataset comprising a one-year time series of the long-term average of the data.

v) The user selects the Operation “Map” (Operation Category “Visualisation”).

w) The user selects options (multiple data products).

x) The user executes the Operation.

y) The Toolbox displays side-by-side maps showing mean values of the used geophysical quantities.

z) The user selects the “Anomalies” Operation (Operation Category “Univariate Descriptive Statistics”, Operation Subcategory “Comparison”).

aa) The user selects options (reference period, apply to multiple data products).

bb) The user executes the Operation.

cc) The Toolbox calculates anomalies for every grid cell in the selected area.

dd) The user selects the Operation “Animated Map” (Operation Category “Visualisation”).

ee) The user selects options (multiple data products).

ff) The user executes the Operation.

gg) The Toolbox displays maps showing animations of evolving anomalies of the used geophysical quantities side-by-side.

hh) The user selects the Operation “Spatial Subsetting” from the Operation Category “Subsetting and Selections”.

ii) The user selects options (drawing of a polygon).

jj) The user executes the Operation.

kk) The Toolbox creates a spatial subset containing data of the selected region.

ll) The user selects the Operation “Arithmetic Mean” (Operation Category “Univariate Descriptive Statistics”, Operation Subcategory “Location Parameters”).

mm) The user selects options (spatial mean, propagation of uncertainties, apply to multiple data products).

nn) The user executes the Operation.

oo) The Toolbox generates new time series consisting of regional mean values.

pp) The user selects the Operation “Long-term Average” (Operation Category “Univariate Descriptive Statistics”, Operation Subcategory “Comparison”).

qq) The user selects options (preserve seasonality, reference period)

rr) The user executes the Operation.

ss) The Toolbox generates a new dataset comprising a one-year time series of the long-term average of the data.

tt) The user selects the “Anomalies” Operation (Operation Category “Univariate Descriptive Statistics”, Operation Subcategory “Comparison”).

uu) The user selects options (reference period).

vv) The user executes the Operation.

ww) The Toolbox calculates anomalies.

xx) The user selects the Operation “Product-Moment Correlation (Pearson)” (Operation Category “Data Intercomparison”, Operation Subcategory “Correlation Analysis”).

yy) The user selects options (scatter plot, apply to multiple data products).

zz) The user executes the Operation.

aaa) The Toolbox displays a scatter plots and correlation statistics on the screen.

bbb) The user saves images and underlying data on a local disk.

E.7 Use Case #7 Regional Cryosphere Climate Service

User Characteristics: User Level 2 expert user (User Community 3 climate service developers and providers)

Problem Definition:

The Federal Office of Environment (FOEN) in Switzerland wants to provide an internet-based platform to disseminate latest information on the cryosphere and its changes in Switzerland. Such information could be, for example, the number of days with snow or other parameters like the glacier extent or start of the melting season.

Before the technical work with the Toolbox can be performed a user survey would be required to obtain detailed requirements for such a climate service.

Exemplary Workflow:

a) The user selects/inputs data products (glacier data from Randolph Glacier Inventory (RGI) and WGMS fluctuation data sets).

b) The user selects/inputs non-CCI data products (meteorological and snow cover data (from MeteoSchweiz and SLF). **

c) The user selects the Operation “Spatial Subsetting” from the Operation Category “Subsetting and Selections”.

d) The user selects options.

e) The user executes the Operation.

f) The Toolbox creates a spatial subset of the data.

g) The user selects the Operation “Temporal Subsetting” from the Operation Category “Subsetting and Selections”.

h) The user selects start and end years of a time period.

i) The user executes the Operation.

j) The Toolbox creates a temporal subset of the data.

k) The user selects the following Operations to analyse snow and cloud cover: “Arithmetic Mean” (Operation Subcategory “Location Parameters”), “Variance and Standard Deviation” (Operation Subcategory “Dispersion Parameters”), “Anomalies”, as well as “Cumulative Changes” (Operation Subcategory “Temporal Comparison”) from the Operation Category “Univariate Descriptive Statistics”.

l) The user selects options (mean, variance, anomaly, cumulative changes, …).

m) The user executes the Operation.

n) The Toolbox calculates the requested values per grid cell.

o) The user selects the “Arithmetics” Operation from the Operation Category “Calculations” to calculate the number of days with snow from the daily snow cover data.

p) The user enters calculating specifications for summing up all days for a specific year (e.g. 10/2006–09/2007) with snow coverage > 0.

q) The user executes the Operation.

r) The Toolbox calculates a new dataset comprising grid cell values showing the number of days with snow for a specific snow season.

s) The user selects the Operation “Map” (Operation Category “Visualisation”).

t) The user selects options (multiple data products).

u) The user executes the Operation.

v) The Toolbox displays side-by-side maps showing the number of snow days for different years.

w) The user selects the “Extract by attributes” Operation from the Operation Category “Band Arithmetics and Statistics + GIS Tools”.

x) The user selects options (name of a specific glacier).

y) The user executes the Operation.

z) The Toolbox generates a new vector dataset comprising the specific glacier only.

aa) The user selects the “Mean Position” Operation from the Operation Category “Band Arithmetics and Statistics + GIS Tools”.

bb) The user selects options.

cc) The user executes the Operation.

dd) The Toolbox generates a new vector dataset comprising the mean extent of the glacier.

ee) The user selects the Operation “Animated Map” (Operation Category “Visualisation”).

ff) The user selects options (multiple data products, transparent layers).

gg) The user executes the Operation.

hh) The Toolbox displays an animated map showing glacier fluctuations as well as the mean position.

ii) The user selects the “Area Estimation” Operation from the Operation Category “Band Arithmetics and Statistics + GIS Tools”.

jj) The user selects options.

kk) The user executes the Operation.

ll) The Toolbox estimates the area covered by the glacier for every time step and for the mean position.

mm) The user selects the Operation “Time Series Plot” (Operation Category “Visualisation”).

nn) The user selects options (multiple data products).

oo) The user executes the Operation.

pp) The Toolbox displays a time series plot showing the evolution of the glacier area as well as the mean value.

qq) The user saves the output.

***** these datasets are not publicly available (e.g. snow cover grids or meteo database), the calculations below can thus not be performed. To keep the use case, it can be seen as a special (CH) version of UC5 (data selection per country)***

E.8 Use Case #8 World Glacier Monitoring Service

User Characteristics: User Level 2 expert users (User Community 5 international bodies)

Problem Definition:

A service of the World Glacier Monitoring Service (WGMS) based on ESA CCI products, combined with other environmental parameters as well as meta data on glaciers, could be the provision of a database of glacier volume changes derived from remote sensing data (e.g. DEM differencing and altimetry sensors)

Exemplary Workflow:

a) The user selects/inputs data products (glacier data from RGI Glacier and WGMS fluctuation data sets).

b) The user selects the Operation “Spatial Subsetting” from the Operation Category “Subsetting and Selections”.

c) The user selects options.

d) The user executes the Operation.

e) The Toolbox creates a spatial subset of the data.

f) The user selects the Operation “Temporal Subsetting” from the Operation Category “Subsetting and Selections”.

g) The user selects start and end years of a time period.

h) The user executes the Operation.

i) The Toolbox creates a temporal subset of the data.

j) The user selects arithmetic or area weighted averaging of the selected data to determine a mean value of the time series

k) The user selects spatial extrapolation and determines the total mass loss of all glaciers in the region (mean specific change multiplied with total area)

Note: This UC is to be compatible with UC5. This UC can now be seen as a subset of the larger UC5.

E.9 Use Case #9 Relationships between Aerosol and Cloud ECV

User Characteristics: User Level 1 High-level expert user (User Community 2 earth system science community)

Problem Definition:

A climate scientist wishes to analyse potential correlations between Aerosol and Cloud ECVs.

Exemplary Workflow:

a) The user selects CCI data products from a checklist (geophysical quantities: aerosol optical depth or absorbing aerosol index, cloud cover).

b) The user selects the Operation “Co-Registration” from the Operation Category “Geometric Adjustment”.

c) The user selects the particular options (Co-Registration method: spline, propagation of uncertainties analysis).

d) The user executes the Operation.

e) The Toolbox performs a co-registration of one dataset onto the coordinate system of the other.

f) The user selects the Operation “Spatial Subsetting” from the Operation Category “Subsetting and Selections”.

g) The user selects options (geospatial point of interest on a rotatable globe (GUI) or specification of coordinates).

h) The user executes the Operation.

i) The Toolbox creates a spatial subset of the data.

j) The user selects the Operation “Temporal Subsetting” from the Operation Category “Subsetting and Selections”.

k) The user selects start and end years of a time range.

l) The user executes the Operation.

m) The Toolbox creates a temporal subset of the data.

n) The user selects the Operation “Time Series Plot” from the Operation Category “Visualisation”.

o) The user selects options (multiple data products).

p) The user executes the Operation.

q) The Toolbox plots time series on the same axes.

r) The user selects the Operation “Product-Moment Correlation (Pearson)” (Operation Category “Data Intercomparison”, Operation Subcategory “Correlation Analysis”).

s) The user selects options (scatter-plot).

t) The user executes the Operation.

u) The Toolbox plots a scatter-plot and correlation statistics on the screen.

v) The user saves the plot as a PNG file.

w) The user selects the Operation “Spatial Subsetting” from the Operation Category “Subsetting and Selections”.

x) The user selects options (polygon on the rotatable globe or specification of coordinates).

y) The user executes the Operation.
z) The Toolbox creates a spatial subset of the data.
aa) The user selects the Operation “Animated Map” from the Operation Category “Visualisation”.
bb) The user selects options (multiple data products).
cc) The user executes the Operation.
dd) The Toolbox displays side-by-side animations.
ee) The user saves the animated maps as GIF files.
ff) The user selects the Operation “Product-Moment Correlation (Pearson)” (Operation Category “Data Intercomparison”, Operation Subcategory “Correlation Analysis”).
gg) The user selects options (grid cell-by-grid cell, map).
hh) The user executes the Operation.
ii) The Toolbox performs a grid cell-by-grid cell correlation between the two two-dimensional time series, and generates a plot displayed on the screen.
jj) The user saves the map (PNG) as well as the correlation statistics (ASCII).

E.10 Use Case #10 Scientific Investigation of NAO Signature

User Characteristics: User Level 1 High-level expert user (User Community 2 earth system science community)

Problem Definition:

A climate scientist wishes to investigate the signature of the North Atlantic Oscillation (NAO) in multiple ECVs using an Operation built by another climate scientist and contributed to the Toolbox.

Exemplary Workflow:

a) The user selects several CCI ECV data products from a checklist (geophysical quantities e.g. cloud cover, sea ice extent, corrected sea surface height, sea surface temperature, surface soil moisture volumetric absolutes).
b) The user selects the Operation “Co-Registration” from the Operation Category “Geometric Adjustment”.
c) The user selects the particular options (Co-Registration method: spline, propagation of uncertainties analysis).
d) The user executes the Operation.
e) The Toolbox performs a co-registration of one dataset onto the coordinate system of the other.
f) The user selects the Operation “Geospatial Gap Filling” from the Operation Category “Geometric Adjustment”.
g) The user selects the particular options (Method: nearest neighbour, apply to multiple data products).

h) The user executes the Operation.

i) The Toolbox performs a geospatial gap filling of the datasets.

j) The user selects the Operation “Spatial Subsetting” from the Operation Category “Subsetting and Selections”.

k) The user selects options.

l) The user executes the Operation.

m) The Toolbox creates a spatial subset of the data.

n) The user selects the Operation “Temporal Subsetting” from the Operation Category “Subsetting and Selections”.

o) The user selects start and end years of a time period.

p) The user executes the Operation.

q) The Toolbox creates a temporal subset of the data.

r) The user selects an Operation which has been developed by another user to plug in to the Toolbox and hook into R [RD-7].

s) The user inputs specific parameter values required by the Operation, and the name of a ASCII file containing the NAO index time series.

t) The user executes the Operation.

u) The Toolbox removes seasonal cycles from the ECVs according to the input parameters and performs a lag-correlation analysis between each ECV and the NAO index by using the plug-in Operation.

v) The Toolbox displays statistics output by the lag-correlation analysis.

w) The user selects the Operation “Time Series Plot” (Operation Category “Visualisation”).

x) The user selects options (multiple data products, lagged).

y) The user executes the Operation.

z) The Toolbox displays a plot showing time series of the NAO index and ECVs in a lagged manner.

aa) The user saves the output to a local disc.

E.11 Use Case #11 School Project on Arctic Climate Change

User Characteristics: User Level 3 Non-expert Users (User Community 6 undergraduate and postgraduate students)

Problem Definition:

As part of a project on Arctic climate change, an undergraduate student wishes to look at different ECVs on a polar stereographic projection.

Exemplary Workflow:

a) The user selects several CCI ECV data products from a checklist (geophysical quantities e.g. sea ice extent, glacier calving front location, corrected sea surface height, sea surface temperature, cloud optical thickness, aerosol type).

b) The user selects an ECV data product on a climate data server in Japan.

c) The user selects the Operation “Geospatial Gap Filling” from the Operation Category “Geometric Adjustment”.

d) The user selects the particular options (Method: nearest neighbour, apply to multiple data products).

e) The user executes the Operation.

f) The Toolbox performs a geospatial gap filling of the datasets.

g) The user selects the Operation “Reprojection” from the Operation Category “Geometric Adjustment”.

h) The user selects the particular options (polar stereographic grid, apply to multiple data products).

i) The user executes the Operation.

j) The Toolbox performs a reprojection of the data products onto the chosen polar stereographic grid.

k) The user selects the Operation “Map” (Operation Category “Visualisation”).

l) The user selects options (multiple data products).

m) The user executes the Operation.

n) The Toolbox displays maps (including legend, land contours etc.) of the reprojected ECVs side by side and provides a slide-bar which allows the user to dynamically fade-out the interpolated grid cells.

E.12 Use Case #12 Marine Environmental Monitoring

User Characteristics: User Level 2 expert Users (User Community 3 climate service developers and providers providing services for User Community 7 knowledgeable public)

Problem Definition:

The eReef project examines the living conditions of the Great Barrier Reef via two subprojects. On the one hand, the aim of the Marine Water Quality Dashboard is to estimate water quality indicators from ocean colour data to deduce brightness and therefore the vitality of coral-competing seagrass and algae. ReefTemp Next Generation, on the other hand, seeks to assess the risk of bleaching due to overly warm water by calculating heat stress indices. This could also be a task for the CCI Toolbox environment.

Exemplary Workflow:

a) The user selects CCI ECV data products from a checklist (geophysical quantities: multiple geophysical quantities from ECV product inherent optical properties).

b) The user selects/inputs data regarding brightness-plant growth relationships, competitor relationships (plant growth-coral vitality), and heat stress-coral vitality relationships.

c) The user selects the Operation “Co-Registration” from the Operation Category “Geometric Adjustment”.

d) The user selects the particular options (Co-Registration method: spline, propagation of uncertainties analysis, apply to multiple data products).

e) The user executes the Operation.

f) The Toolbox performs a co-registration of one dataset onto the coordinate system of the other.

g) The user selects the Operation “Geospatial Gap Filling” from the Operation Category “Geometric Adjustment”.

h) The user selects the particular options (Method: nearest neighbour, apply to multiple data products).

i) The user executes the Operation.

j) The Toolbox performs a geospatial gap filling of the datasets.

k) The user selects the Operation “Spatial Subsetting” from the Operation Category “Subsetting and Selections”.

l) The user selects options.

m) The user executes the Operation.

n) The Toolbox creates a spatial subset of the data.

o) The user selects the Operation “Temporal Subsetting” from the Operation Category “Subsetting and Selections”.

p) The user selects start and end years of a time period.

q) The user executes the Operation.

r) The Toolbox creates a temporal subset of the data.

s) The user selects/inputs a plug-in/API script containing a water optical property model.

t) The user enters and modifies values.

u) The user runs the plug-in/script.

v) The Toolbox calculates brightness from IOP by the use of the water optical property model.

w) The user selects the Operation “Arithmetics” (Operation Category “Calculations”).

x) The user enters calculation specifications to deduce plant growth from brightness by means of a known brightness-plant growth regression.

y) The user executes the Operation.

z) The Toolbox calculates plant growth from brightness.

aa) The user selects the Operation “Arithmetics” (Operation Category “Calculations”).

bb) The user enters calculation specifications to deduce coral vitality from plant growth by means of a known plant growth-coral vitality regression (competitor relationships).

cc) The user executes the Operation.

dd) The Toolbox calculates coral vitality from plant growth.

ee) The user selects the „Anomalies" Operation (Operation Category "Univariate Descriptive Statistics", Operation Subcategory "Temporal Comparison")

ff) The user selects options (apply to multiple data products).

gg) The user executes the Operation.

hh) The Toolbox calculates anomalies.

ii) The user selects the Operation "Percentiles and Median" (Operation Category "Univariate Descriptive Statistics", Operation Subcategory "Location Parameters").

jj) The user selects options (extremes e.g. p10 and 90, apply to multiple data products).

kk) The user executes the Operation.

ll) The Toolbox sorts the values and output those covering the maximum and minimum 10 %.

mm) The user selects the Operation "Trend Analysis" (Operation Category "Time Series Analysis").

nn) The user selects options (linear trend, test on significance, apply to multiple data products).

oo) The user executes the Operation.

pp) The Toolbox calculates a linear trend function from the data and performs a test on significance.

qq) The user selects the Operation "Time Series Plot" (Operation Category "Visualisation").

rr) The user selects options (multiple data products).

ss) The user executes the Operation.

tt) The Toolbox displays a time series plot showing IOP and coral vitality trends on the same axes.

uu) The user selects the Operation "Animated Map" (Operation Category "Visualisation").

vv) The user selects options (multiple data products, anomalies).

ww) The user executes the Operation.

xx) The Toolbox displays maps showing animations of evolving IOP and coral vitality anomalies.

yy) The user selects the Operation "Product-Moment Correlation (Pearson)" (Operation Category "Data Intercomparison", Operation Subcategory "Correlation Analysis").

zz) The user selects options (scatter-plot).

aaa) The user executes the Operation.

bbb) The Toolbox plots a scatter-plot and correlation statistics of IOP and coral vitality.

ccc) The user selects CCI ECV data products from a checklist (geophysical quantity: sea water temperature).

ddd) The user selects/inputs a plug-in/API-script for (heat stress) index calculation.

eee) The user enters and modifies values.

fff) The user runs the plug-in/script.

ggg) The Toolbox calculates a heat stress index time series by means of the plug-in.

hhh) The user selects the Operation “Arithmetics” (Operation Category “Calculations”).

iii) The user enters calculation specifications to deduce coral vitality from heat stress by means of a known heat stress-coral vitality regression (coral vulnerability to heat stress).

jjj) The user executes the Operation.

kkk) The Toolbox calculates coral vitality from heat stress.

lll) The user selects the Operation “Animated Map” (Operation Category “Visualisation”).

mmm) The user selects options (multiple data products).

nnn) The user executes the Operation.

ooo) The Toolbox displays maps showing animations of evolving sea water temperature and coral vitality side-by-side.

ppp) The user selects the Operation “Product-Moment Correlation (Pearson)” (Operation Category “Data Intercomparison”, Operation Subcategory “Correlation Analysis”).

qqq) The user selects options (time series plot).

rrr) The user executes the Operation.

sss) The Toolbox plots a scatter-plot and correlation statistics of SST and coral vitality on the screen.

ttt) The user saves the output to a local disk.

E.13 Use Case #13 Drought Occurrence Monitoring in Eastern Africa

User Characteristics: User Level 2 expert Users (User Communities 3 climate service developers and providers and 5 international bodies providing services for User Community 7 knowledgeable public)

Problem Definition:

Due to time-lagged teleconnections, weather conditions in Eastern Africa are highly influenced by climate modes of variability in remote regions. Therefore, climate indices such as for ENSO, MJO or QBO as well as the NDVI can be used to estimate the drought probability in Africa. Long time series from satellite observations act as basis for the construction of statistical forecasting models, which are then run by latest meteorological data.

Exemplary Workflow:

a) The user selects CCI ECV data products from a checklist (geophysical quantities: sea surface temperature, cloud cover, soil moisture, burned area).

b) The user selects/inputs non-CCI data products (geophysical quantities: near-surface temperature, precipitation, NDVI, sea level pressure, zonal wind, outgoing longwave radiation).

c) The user selects the Operation “Co-Registration” from the Operation Category “Geometric Adjustment”.

d) The user selects the particular options (Co-Registration method: cubic convolution, propagation of uncertainties analysis, apply to multiple data products).

e) The user executes the Operation.

f) The Toolbox performs a co-registration of one dataset onto the coordinate system of the other.

g) The user selects the Operation “Geospatial Gap Filling” from the Operation Category “Geometric Adjustment”.

h) The user selects the particular options (Method: nearest neighbour, apply to multiple data products).

i) The user executes the Operation.

j) The Toolbox performs a geospatial gap filling of the datasets.

k) The user selects the Operation “Spatial Subsetting” from the Operation Category “Subsetting and Selections”.

l) The user selects options.

m) The user executes the Operation.

n) The Toolbox creates a spatial subset of the data.

o) The user selects the Operation “Temporal Subsetting” from the Operation Category “Subsetting and Selections”.

p) The user selects start and end years of a time period.

q) The user executes the Operation.

r) The Toolbox creates a temporal subset of the data.

s) The user selects the Operation “Arithmetic Mean” (Operation Category “Univariate Descriptive Statistics”, Operation Subcategory “Location Parameters”).

t) The user selects options (spatial mean, propagation of uncertainties, apply to multiple data products).

u) The user executes the Operation.

v) The Toolbox generates new time series consisting of regional mean values of E African NST, PRE, cloud cover, soil moisture, and burned area.

w) The user selects the “Index calculation” Operation/user-supplied plugin/API (repeat this and the next three steps to calculate Niño3.4 index from SST, SOI from SLP, QBO from zonal wind, MJO from OLR).

x) The user selects the requested index.

y) The user executes the Operation.

z) The Toolbox/plug-in generates an index time series.

aa) The user selects the Operation “Time Series Plot” (Operation Category “Visualisation”).

bb) The user selects options (multiple data products, lagged).

cc) The user executes the Operation.

dd) The Toolbox displays a time series plot showing index time series as well as NST, PRE, cloud cover, soil moisture, and burned area over Eastern Africa in a time-lagged manner.

ee) The user selects/inputs a plug-in/API script for the generation of a time-lagged (linear) regression model.

ff) The user enters and modifies values (apply to multiple data products).

gg) The user runs the plug-in/script.

hh) The Toolbox calculates (time lagged) regression rules by using the plug-in/API.

ii) The user selects the Operation “Plot” (Operation Category “Visualisation”).

jj) The user selects options.

kk) The user executes the Operation.

ll) The Toolbox plots the regression function between specific index time series and climate variables over E Africa.

mm) The user enters latest meteorological data (SST, SLP, OLR) as input for the generated model

nn) The Toolbox provides deduced values for E African SLP, NST, PRE and OLR by means of the model.

oo) The user saves the output.

pp) Note: instead of regional mean values, also a grid cell-based regression can be performed.

E.14 Use Case #14 Drought Impact Monitoring and Assessment in China

User Characteristics: User Level 2 expert Users (User Communities 3 climate service developers and providers and 5 international bodies)

Problem Definition: (Solely basic idea taken from WMO (2015))

Drought occurrence and severity in terms of fire, vegetation state, and soil moisture shall be estimated by the use of temperature and rainfall (+ humidity and evapotranspiration) data to

prepare countermeasures. This is achieved by the construction of an empirical statistical model using satellite-derived time series which is afterwards run by actual meteorological data.

Exemplary Workflow:

a) The user selects CCI ECV data products from a checklist (geophysical quantities: surface soil moisture volumetric absolutes, burned area).

b) The user selects/inputs non-CCI data products (geophysical quantities: NDVI, near surface temperature, precipitation(, humidity, evapotranspiration)).

c) The user selects the Operation “Co-Registration” from the Operation Category “Geometric Adjustment”.

d) The user selects the particular options (Co-Registration method: bilinear, propagation of uncertainties analysis, apply to multiple data products).

e) The user executes the Operation.

f) The Toolbox performs a co-registration of one dataset onto the coordinate system of the other.

g) The user selects the Operation “Geospatial Gap Filling” from the Operation Category “Geometric Adjustment”.

h) The user selects the particular options (Method: nearest neighbour, apply to multiple data products).

i) The user executes the Operation.

j) The Toolbox performs a geospatial gap filling of the datasets.

k) The user selects the Operation “Spatial Subsetting” from the Operation Category “Subsetting and Selections”.

l) The user selects options.

m) The user executes the Operation.

n) The Toolbox creates a spatial subset of the data.

o) The user selects the Operation “Temporal Subsetting” from the Operation Category “Subsetting and Selections”.

p) The user selects start and end years of a time period.

q) The user executes the Operation.

r) The Toolbox creates a temporal subset of the data.

s) The user selects/inputs a plug-in/API script for the generation of a time-lagged grid cell-by-grid cell regression model

t) The user enters and modifies values.

u) The user runs the plug-in/script.

v) The Toolbox calculates multidimensional (time lagged) grid cell-by-grid cell regression rules by using the plug-in/API.

w) The user enters latest meteorological data as input for the generated model (geophysical quantities: near surface temperature, precipitation(, humidity, evapotranspiration)).

x) The Toolbox provides deduced values for fire occurrence, vegetation state and soil moisture by means of the model.

y) The user selects the Operation “Map” (Operation Category “Visualisation”).

z) The user selects options (multiple data products).

aa) The user executes the Operation.

bb) The Toolbox displays side-by-side maps showing the observed NST and PRE values as well as the deduced values for fire occurrence, vegetation state and soil moisture.

cc) The user saves the output.

dd) Note: instead of grid cell-by-grid cell calculations, also regional means could be used

ee) Optional between l) and m)

   a. The user selects the “Layer Operations” Operation from the Operation Category “Band Arithmetics and Statistics + GIS Tools” (equals “Band Arithmetics” Operation).
   b. The user enters calculation specifications for a drought severity index.
   c. The user executes the Operation.
   d. The Toolbox calculates a new dataset comprising a grid cell-by-grid cell drought severity index.
   e. The user selects the Operation “Animated Map” (Operation Category “Visualisation”).
   f. The user selects options.
   g. The user executes the Operation.
   h. The Toolbox displays an animated map showing the time evolution of the drought severity index over China.

E.15 Use Case #15 Renewable Energy Resource Assessment with regard to Topography

User Characteristics: User Level 2 expert Users (User Communities 3 climate service developers and providers and 5 international bodies)

Problem Definition:

The long-term potential for renewable energy generation is to be estimated by considering the effect of cloud features, aerosols, ozone, and water vapour on solar irradiance as well as topographical data.

Exemplary Workflow:

a) The user selects CCI ECV data products from a checklist (geophysical quantities: cloud cover, cloud optical thickness, cloud top height, aerosol optical depth, absorbing aerosol index, ozone total column).

b) The user selects non-CCI ECV data products from a checklist (geophysical quantities: water vapour total column, solar irradiance).

c) The user enters DEM data for the derivation of tilt and orientation.

d) The user selects the Operation “Co-Registration” from the Operation Category “Geometric Adjustment”.

e) The user selects the particular options (Co-Registration method: bilinear, propagation of uncertainties analysis, apply to multiple data products).

f) The user executes the Operation.

g) The Toolbox performs a co-registration of one dataset onto the coordinate system of the other.

h) The user selects the Operation “Temporal Gap Filling” from the Operation Category “Non-Geometric Adjustment”.

i) The user selects the particular options (Method: nearest neighbour, apply to multiple data products).

j) The user executes the Operation.

k) The Toolbox performs a temporal gap filling of the datasets.

l) The user selects the Operation “Spatial Subsetting” from the Operation Category “Subsetting and Selections”.

m) The user selects options.

n) The user executes the Operation.

o) The Toolbox creates a spatial subset of the data.

p) The user selects the Operation “Temporal Subsetting” from the Operation Category “Subsetting and Selections”.

q) The user selects start and end years of a time period.

r) The user executes the Operation.

s) The Toolbox creates a temporal subset of the data.

t) The user selects/inputs a plug-in/API script to implement fast radiative transfer calculations.

u) The user enters and modifies values.

v) The user runs the plug-in/script.

w) The Toolbox conducts fast radiative transfer calculation by means of the plug-in/API.

x) The user selects the Operation “Arithmetic Mean” (Operation Category “Univariate Descriptive Statistics”, Operation Subcategory “Location Parameters”).

y) The user selects options (temporal mean, propagation of uncertainties).

z) The user executes the Operation.

aa) The Toolbox generates a new dataset comprising the mean irradiance per grid cell for the give time span.

bb) The user selects the Operation “Grid Cell Extraction by Values” from the Operation Category “Subsetting and Selections”.

cc) The user selects options (grid cells with irradiance values greater than a boundary value).

dd) The user executes the Operation.

ee) The Toolbox creates a new dataset containing only those grid cells meeting the criteria.

ff) The user selects the Operation “Grid Cell Extraction by Values” from the Operation Category “Subsetting and Selections”.

gg) The user selects options (grid cells with tilt/orientation values greater/lower than a boundary values).

hh) The user executes the Operation.

ii) The Toolbox creates a new dataset containing only those grid cells meeting the criteria.

jj) The user selects the Operation “Band Arithmetics” (Operation Category “Band Arithmetics and Statistics + GIS Tools”)

kk) The user selects options for extracting all irradiance grid cells meeting the topographic criteria.

ll) The Toolbox creates a new dataset comprising all irradiance grid cells suitable for PV use.

mm) The user selects the Operation “Map” (Operation Category “Visualisation”).

nn) The user selects options.

oo) The user executes the Operation.

pp) The Toolbox displays a map of suitable areas including legend, north arrow and other annotations.

qq) The user selects the „Area Estimation” Operation (Operation Category “Band Arithmetics and Statistics + GIS Tools”).

rr) The user selects options.

ss) The user executes the Operation.

tt) The Toolbox estimates the area suitable for solar energy production by grid cell count.

uu) The user saves the output.

E.16 Use Case #16 Monitoring Tropical Deforestation

User Characteristics: User Level 2 expert Users (User Communities 3 climate service developers and providers and 5 international bodies)

Problem Definition:

Maps of forest cover, change, and deforestation shall be produced depicting forest status and trends for 5-year periods centred around 2000, 2005, and 2010. Additionally, vector data regarding infrastructure (e.g. road works) could be obtained from local authorities and compared with forest evolution.

Exemplary Workflow:

a) The user selects CCI ECV data products from a checklist (geophysical quantities: land cover (+ leaf area index)).

b) The user selects/inputs vector data regarding infrastructure like road works.

c) The user selects/inputs vector data.

d) The user selects the Operation “Co-Registration” from the Operation Category “Geometric Adjustment”.

e) The user selects the particular options (Co-Registration method: nearest neighbour, propagation of uncertainties analysis, apply to multiple data products).

f) The user executes the Operation.

g) The Toolbox performs a co-registration of one dataset onto the coordinate system of the other.

h) The user selects the Operation “Spatial Subsetting” from the Operation Category “Subsetting and Selections”.

i) The user selects options.

j) The user executes the Operation.

k) The Toolbox creates a spatial subset of the data.

l) The user selects the Operation “Temporal Subsetting” from the Operation Category “Subsetting and Selections”.

m) The user selects start and end years of a time period.

n) The user executes the Operation.

o) The Toolbox creates a temporal subset of the data.

p) The user selects the Operation “Grid Cell Class Extraction” from the Operation Category “Subsetting and Selections”.

q) The user selects options (forest from LC data).

r) The user executes the Operation.

s) The Toolbox creates a new dataset containing forest only.

t) The user selects the Operation “Animated Map” (Operation Category “Visualisation”).

u) The user selects options.

v) The user executes the Operation.

w) The Toolbox displays a map showing the time evolution of forest cover.

x) The user selects the “Area Estimation” Operation (Operation Category “Band Arithmetics and Statistics + GIS Tools”).

y) The user selects options.

z) The user executes the Operation.

aa) The Toolbox estimates the forest area by grid cell count.

bb) The user selects the Operation “Time Series Plot” (Operation Category “Visualisation”).

cc) The user selects options.

dd) The user executes the Operation.

ee) The Toolbox displays a time series plot showing the time evolution of forest area.

ff) The user selects the “Extract by Attributes” Operation (Operation Category “Band Arithmetics and Statistics + GIS Tools”)

gg) The user selects options (extract all “no forest”-grid cells covered by “Infrastructure”)

hh) The user executes the Operation.

ii) The Toolbox creates a new dataset/layer comprising all “no forest”-grid cells covered by Infrastructure

jj) The user selects the Operation “Animated Map” (Operation Category “Visualisation”).

kk) The user selects options (multiple data products, transparent layers).

ll) The user executes the Operation.

mm) The Toolbox displays a map showing the time evolution of forest cover as well as Infrastructure-covered no forest grid cells.

nn) The user saves the results.

E.17 Use Case #17 Stratospheric Ozone Monitoring and Assessment

User Characteristics: User Level 2 expert Users (User Communities 3 climate service developers and providers and 5 international bodies)

Problem Definition:

As UV exposure is a highly relevant health factor, the state of the ozone layer shall be monitored as well as its influence parameters.

Exemplary Workflow:

a) The user selects CCI ECV data products from a checklist (geophysical quantity: ozone total column, ozone nadir profile, ozone limb profile)

b) The user selects/inputs non-CCI data products (geophysical quantity: UV exposure).

c) The user selects the Operation “Co-Registration” from the Operation Category “Geometric Adjustment”.

d) The user selects the particular options (Co-Registration method: spline, propagation of uncertainties analysis).

e) The user executes the Operation.

f) The Toolbox performs a co-registration of one dataset onto the coordinate system of the other.

g) The user selects the Operation “Geospatial Gap Filling” from the Operation Category “Geometric Adjustment”.

h) The user selects the particular options (Method: nearest neighbour, apply to multiple data products).

i) The user executes the Operation.

j) The Toolbox performs a geospatial gap filling of the datasets.

k) The user selects the Operation “Spatial Subsetting” from the Operation Category “Subsetting and Selections”.

l) The user selects options (horizontal and vertical).

m) The user executes the Operation.

n) The Toolbox creates a spatial subset of the data.

o) The user selects the Operation “Temporal Subsetting” from the Operation Category “Subsetting and Selections”.

p) The user selects start and end years of a time period.

q) The user executes the Operation.

r) The Toolbox creates a temporal subset of the data.

s) The user selects/inputs a plug-in/API for the generation of a (linear) regression model.

t) The user enters and modifies values.

u) The user runs the plug-in/script. (The model can be used to estimate UV exposure from stratospheric ozone values.)

v) The Toolbox generates a regression model by means of the plug-in/API.

w) The user selects/inputs CCI and non-CCI data products (geophysical quantities: atmospheric concentrations of ozone depleting substances).

x) The user selects the Operation “Product-Moment Correlation (Pearson)” (Operation Category “Data Intercomparison”, Operation Subcategory “Correlation Analysis”).

y) The user selects options (time series plot).

z) The user executes the Operation.

aa) The Toolbox plots a time series plot showing both ozone and ODS on the same axes as well as correlation statistics on the screen.

bb) The user selects the Operation “Trend Analysis” (Operation Category “Time Series Analysis”).

cc) The user selects options to perform a trend analysis of stratospheric ozone concentrations (plot).

dd) The user executes the Operation.

ee) The Toolbox performs a trend analysis and plots the regression function.

ff) The user selects the Operation “Animated Map” (Operation Category “Visualisation”).

gg) The user selects options (multiple data products).

hh) The user executes the Operation.

ii) The Toolbox displays (animated) maps showing ozone concentrations and UV exposure at various time steps.

jj) The user saves the output.

E.18 Use Case #18 Examination of ENSO and its impacts based on ESA CCI data

User Characteristics: User Level 3 non-expert user (User Community 6 undergraduate and postgraduate students)

Problem Definition:

As a project work, a student’s task is to conduct an examination of ENSO solely by the use of ESA CCI data. For this, the first principal component of the combined EOF analysis of cloud cover, sea level, and sea surface temperature (probably also ocean colour) in the (central/eastern) equatorial Pacific shall be intercompared with ocean colour (eastern equatorial Pacific), fire disturbance, and soil moisture (landmasses adjacent to the eastern and western tropical Pacific).

Exemplary Workflow:

a) The user selects CCI ECV data products from a checklist (geophysical quantities: cloud cover, corrected sea surface height, sea surface temperature, phytoplankton chlorophyll-A concentration, burned area, surface soil moisture volumetric absolutes).

b) The user selects the Operation “Co-Registration” from the Operation Category “Geometric Adjustment”.

c) The user selects the particular options (Co-Registration method: spline, propagation of uncertainties analysis).

d) The user executes the Operation.

e) The Toolbox performs a co-registration of one dataset onto the coordinate system of the other.

f) The user selects the Operation “Spatial Subsetting” from the Operation Category “Subsetting and Selections”.

g) The user selects options (drawing of a polygon in the equatorial Pacific).

h) The user executes the Operation.

i) The Toolbox creates a spatial subset of the data.

j) The user selects the Operation “Temporal Subsetting” from the Operation Category “Subsetting and Selections”.

k) The user selects start and end years of a time period.

l) The user executes the Operation.

m) The Toolbox creates a temporal subset of the data.

n) The user selects the Operation “Removal of Seasonal Cycles” (Operation Category “Univariate Descriptive Statistics”, Operation Subcategory “Filtering”)

o) The user selects options (apply to multiple data products).

p) The user executes the Operation.

q) The Toolbox removes seasonal cycles from cloud cover, sea level, sea surface temperature.

r) The user selects the Operation “Trend Analysis” (Operation Category “Time Series Analysis”).

s) The user selects options (quadratic trend, remove trend, apply to multiple data products).

t) The user executes the Operation.

u) The Toolbox removes quadratic trend from cloud cover, sea level, sea surface temperature.

v) The user selects the “Test on Distributions” Operation (Operation Category “Statistical Inference”).

w) The user selects options to perform a test for normal distribution (apply to multiple data products).

x) The user executes the Operation.

y) The Toolbox performs a test to get to know if the data follow normal distributions.

z) The user selects the Operation “EOF Analysis” (Operation Category “Complex Computations”).

aa) The user selects options (combined EOF analysis, correlation matrix).

bb) The user executes the Operation.

cc) The Toolbox performs an EOF analysis.

dd) The user selects a created dataset comprising eigenvalues and opens it as a table.

ee) The user selects EOF datasets to be displayed as new layers (without legend, annotations etc. → Quick look).

ff) The user observes eigenvalues as well EOF maps and compares the results with his knowledge about ENSO and EOF analysis.

gg) The user selects regions on landmasses adjacent to the equatorial to tropical Pacific (apply to multiple data products).

hh) The user selects the Operation “Arithmetic Mean” (Operation Category “Univariate Descriptive Statistics”, Operation Subcategory “Location Parameters”).

ii) The user selects options (spatial mean, propagation of uncertainties, apply to multiple data products).

jj) The user executes the Operation.

kk) The Toolbox generates new time series consisting of regional mean values of each ocean colour, fire, and soil moisture.

ll) The user selects the Operation "Product-Moment Correlation (Pearson)" (Operation Category "Data Intercomparison", Operation Subcategory "Correlation Analysis").

mm) The user selects options (scatter-plot, time-series plot).

nn) The user executes the Operation.

oo) The Toolbox performs correlation analysis between the time series of the first principal component and regional mean values of the selected variables. The Toolbox displays plots showing the time series on the same axes as well as scatterplots of the values.

pp) The user selects a point on the globe to compare its (SM, F, OC, …) values with the first principal component.

qq) The user saves the output.

E.19 Use Case #19 GHG Concentrations over Europe

User Characteristics: User Level 3 non-expert user (User Community 7 knowledgeable Public)

Problem Definition:

A person wants to know how greenhouse gas concentrations over Europe evolved during the last years.

Exemplary Workflow:

a) The user selects CCI ECV data products from a checklist (geophysical quantities: column-average dry air mole fraction of CO_2, column-average dry air mole fraction of CH_4).

b) The user selects the Operation "Spatial Subsetting" from the Operation Category "Subsetting and Selections".

c) The user selects options (selection of Europe from a list of main regions).

d) The user executes the Operation.

e) The Toolbox creates a spatial subset of the data containing Europe.

f) The user selects the Operation "Temporal Subsetting" from the Operation Category "Subsetting and Selections".

g) The user selects start and end years of a time period.

h) The user executes the Operation.

i) The Toolbox creates a temporal subset of the data.

j) The user selects the Operation "Animated Map" (Operation Category "Visualisation").

k) The user selects options (multiple data products).

l) The user executes the Operation.

m) The Toolbox creates and displays (animated) maps including legends etc. depicting the evolution of GHG concentrations.

n) The user saves the maps.

E.19a Use Case #19a Ozone Concentrations over the Pole

User Characteristics: User Level 3 non-expert user (User Community 7 knowledgeable Public)

Problem Definition:

A person wants to know how the ozeon concentrations over the Poles evolved during the last years.

Exemplary Workflow:

o) (geophysical quantity: ozone total column, ozone nadir profile, ozone limb profile)

p) The user selects the Operation “Spatial Subsetting” from the Operation Category “Subsetting and Selections”.

q) The user selects options (selection of Pole region from a list of main regions).

r) The user executes the Operation.

s) The Toolbox creates a spatial subset of the data containing the Pole.

t) The user selects the Operation “Temporal Subsetting” from the Operation Category “Subsetting and Selections”.

u) The user selects start and end years of a time period.

v) The user executes the Operation.

w) The Toolbox creates a temporal subset of the data.

x) The user selects the Operation “Animated Map” (Operation Category “Visualisation”).

y) The user selects options (multiple data products).

z) The user executes the Operation.

aa) The Toolbox creates and displays (animated) maps including legends etc. depicting the evolution of ozone concentrations.

bb) The user saves the maps.

E.20 Use Case #20 Examination of North Eastern Atlantic SST Projections

User Characteristics: User Level 1 High-level expert user (User Community 1 international climate research community)

Problem Definition:

A climate scientist uses CCI data to validate the output of several CMIP5 models concerning SST in the north eastern Atlantic Ocean. Afterwards he picks the best (measure? RSME, …) model runs to perform a trend analysis regarding the future evolution using the ensemble mean and uncertainties as well as probability density functions. Applying an Analysis of Variance, he examines the different results of the models.

Exemplary Workflow:

a) The user selects CCI ECV data products from a checklist (geophysical quantity: sea surface temperature).

b) The user selects/inputs model data products (geophysical quantity: sea surface temperature).

c) The user selects the Operation “Co-Registration” from the Operation Category “Geometric Adjustment”.

d) The user selects the particular options (Co-Registration method: spline, propagation of uncertainties analysis, apply to multiple data products).

e) The user executes the Operation.

f) The Toolbox performs a co-registration of one dataset onto the coordinate system of the other.

g) The user selects the Operation “Geospatial Gap Filling” from the Operation Category “Geometric Adjustment”.

h) The user selects the particular options (method: nearest neighbour, apply to multiple data products).

i) The user executes the Operation.

j) The Toolbox performs a geospatial gap filling of the datasets.

k) The user selects the Operation “Spatial Subsetting” from the Operation Category “Subsetting and Selections”.

l) The user selects options.

m) The user executes the Operation.

n) The Toolbox creates a spatial subset of the data.

o) The user selects the Operation “Temporal Subsetting” from the Operation Category “Subsetting and Selections”.

p) The user selects start and end years of a time period.

q) The user executes the Operation.

r) The Toolbox creates a temporal subset of the data.

s) The user selects/inputs a plug-in/API script comprising a user-determined validation model.

t) The user enters and modifies values.

u) The user runs the plug-in/script.

v) The Toolbox performs a model validation based on CCI data by means of the self-provided model.

w) The user selects a created dataset comprising quality measures and opens it as a table.

x) The user discards model datasets undercutting particular values.

y) The user selects the Operation “Arithmetic Mean” (Operation Category “Univariate Descriptive Statistics”, Operation Subcategory “Location Parameters”).

z) The user selects options (spatial mean, propagation of uncertainties, apply to multiple data products).

aa) The user executes the Operation.

bb) The Toolbox generates new time series consisting of regional mean values for the NE Atlantic of CCI as well as model based SST data.

cc) The user selects the Operation “Temporal Subsetting” from the Operation Category “Subsetting and Selections”.

dd) The user selects start and end years for a reference time period for CCI SST data.

ee) The user executes the Operation.

ff) The Toolbox creates a temporal subset of the data.

gg) The user selects the Operation “Arithmetic Mean” (Operation Category “Univariate Descriptive Statistics”, Operation Subcategory “Location Parameters”).

hh) The user selects options (temporal mean).

ii) The user executes the Operation.

jj) The Toolbox calculates the climatological mean value for the CCI SST data.

kk) The user selects the Operation “Temporal Subsetting” from the Operation Category “Subsetting and Selections”.

ll) The user selects the 21st century as time period of interest for the model data.

mm) The user executes the Operation.

nn) The Toolbox creates a 21st century subset of the model data.

oo) The user selects the Operation “Removal of Seasonal Cycles” (Operation Category “Univariate Descriptive Statistics”, Operation Subcategory “Filtering”)

pp) The user selects options (apply to multiple data products)

qq) The user executes the Operation.

rr) The Toolbox removes seasonal cycles from all selected datasets.

ss) The user selects the “Arithmetics” Operation from the Operation Category “Calculations”

tt) The user enters calculation specifications for the calculation of the model data deviation from the CCI data climatological mean (apply to multiple data products).

uu) The user executes the Operation.

vv) The Toolbox calculates new datasets comprising the anomaly of the model data with respect to the long term CCI data mean for each step.

Trend analysis

ww) The user selects the Operation “Multi Dataset Mean” (Operation Category “Ensemble Statistics”)

xx) The user selects options (apply to multiple data products).

yy) The user executes the Operation.

zz) The Toolbox calculates a new time series comprising the multi model mean of SST as well as their deviations from the CCI climatological mean.

aaa) The user selects the Operations “Uncertainties and Spreads” (Operation Category “Ensemble Statistics”)

bbb) The user selects options (e.g. one standard deviation, full range, apply to multiple data products).

ccc) The user executes the Operation.

ddd) The Toolbox calculates two time series comprising minimum and maximum values of the chosen range of model uncertainties (e.g. mean value ± one standard deviation) for each SST as well as their deviations from the CCI climatological mean.

eee) The user selects the Operation “Trend Analysis” (Operation Category “Time Series Analysis”).

fff) The user selects options (linear trend, apply to multiple data products).

ggg) The user executes the Operation.

hhh) The Toolbox calculates linear trends regarding the anomaly from the CCI climatological mean for all selected datasets and the multi model mean.

iii) The user selects the Operation “Time Series Plot” (Operation Category “Visualisation”).

jjj) The user selects options (multiple data products)

kkk) The user executes the Operation.

lll) The Toolbox displays a time series plot showing the linear trend functions of all selected model data for the 21st century as well as for their multi model mean.

Probability density functions (all “Trend Analysis” steps can be skipped if only probability density functions are requested)

mmm) The user selects a certain step in time (repeat from here on for different time steps until before “Plot”).

nnn) The user selects the Operation “Probability Density Functions” (Operation Category “Statistical Inference”).

ooo) The user selects options.

ppp) The user executes the Operation.

qqq) The Toolbox computes probability density functions for SST anomalies.

rrr) The user selects the Operation “Plot” (Operation Category “Visualisation”).

sss) The user selects options (multiple data products, x-axes as values, y-axes as probability).

ttt) The user executes the Operation.

uuu) The Toolbox displays a plot comprising probability density functions for different time steps in different colours.

vvv) The user selects the Operation “Analysis of Variance” (Operation Category “Statistical Inference”).

www) The user selects options.

xxx) The user executes the Operation.

yyy) The Toolbox performs an Analysis of Variance (ANOVA) to see if there is a significant difference in the results of the different models.

zzz) The user selects the „Visualisation” Operation.

aaaa) The user selects options.

bbbb) The user saves the output.

E.21 Use Case #21 Investigation of Relationships between Ice Sheet ECV Parameters

User Characteristics: User Level 1 High-level expert user (User Community 2 earth system science community)

Problem Definition:

A scientist wants to gain insight into the relationship between the Ice Sheets CCI ECV parameters. At first, Surface Elevation Change (SEC), Ice Velocity (IV), and Gravitational Mass Balance (GMB) are compared. Afterwards, a basin-wise comparison of Surface Elevation Change averages and Gravitational Mass Balance averages is conducted. And finally vector and grid data are compared by co-plotting of IV and Calving Front Location (CFL) data. Additionally, it would be interesting to examine the relationships between sea ice, SST around Greenland, glacier melt respectively cloud cover, and SEC/IV.

Exemplary Workflow:

a) The user selects CCI ECV data products from a checklist (geophysical variables: ice sheet surface elevation change, ice sheet velocity, gravitational mass balance).

b) The user selects the Operation “Co-Registration” from the Operation Category “Geometric Adjustment”.

c) The user selects the particular options (co-registration method: spline, propagation of uncertainties analysis, apply to multiple data products).

d) The user executes the Operation.

e) The Toolbox performs a co-registration of the datasets onto the coordinate system of the SEC data.

f) The user selects the Operation “Geospatial Gap Filling” from the Operation Category “Geometric Adjustment”.

g) The user selects the particular options (method: nearest neighbour, apply to multiple data products).

h) The user executes the Operation.

i) The Toolbox performs a geospatial gap filling of the datasets.

j) The user selects the datasets to be displayed as different layers.

k) The user selects the Operation „Ice Sheets Analysis” from the Operation Category “Band Arithmetics and Statistics + GIS Tools” (TBD).

l) The user selects options to calculate the IV vector magnitude (per grid cell).

m) The user executes the Operation.

n) The Toolbox creates a new dataset comprising the IV vector magnitude per grid cell and time step.

o) The user selects the new dataset to be displayed as a new layer.

p) The user selects the “Temporal Aggregation” Operation from the Operation Category “Non-geometrical Adjustment”.

q) The user selects options to perform a temporal aggregation of the SEC data to the GMB data times.

r) The user executes the Operation.

s) The Toolbox temporally aggregated the two datasets.

t) The user selects the Operation “Temporal Subsetting” from the Operation Category “Subsetting and Selections”.

u) The user selects start and end years of a time period.

v) The user executes the Operation.

w) The Toolbox creates a temporal subset of the data.

x) The user selects the Operation “Product-Moment Correlation (Pearson)” (Operation Category “Data Intercomparison”, Operation Subcategory “Correlation Analysis”).

y) The user selects options (map).

z) The user executes the Operation.

aa) The Toolbox calculates the correlation coefficient (pr. grid cell) between the SEC data and the GMB data and displays a correlation map as a new layer.

bb) The user selects/inputs a polygon shapefile corresponding to one of the GMB basins.

cc) The user selects the Operation “Clipping” (Operation Category “Band Arithmetics and Statistics + GIS Tools”)

dd) The user selects options (apply to multiple data products).

ee) The Toolbox creates a new dataset comprising all SEC and GMB grid cells inside the basin.

ff) The user selects the Operation “Arithmetic Mean” (Operation Category “Univariate Descriptive Statistics”, Operation Subcategory “Location Parameters”).

gg) The user selects options (spatial mean, propagation of uncertainties, apply to multiple data products).

hh) The user executes the Operation.

ii) The Toolbox generates new time series consisting of regional mean values of GMB and SEC.

jj) The user selects the Operation “Time Series Plot” (Operation Category “Visualisation”).

kk) The user selects options (multiple data products).

ll) The user executes the Operation.

mm) The Toolbox displays a time series plot of the averaged values in comparison with the provided GMB total basin values.

nn) The user selects/inputs data (geophysical quantity: calving front location)(time series, each element in the time series is a set of (lon/lat) line segments).

oo) The user selects the Operation “Animated Map” (Operation Category “Visualisation”).

pp) The user selects options (multiple data products, transparent layers).

qq) The user executes the Operation.

rr) The Toolbox displays an animated map showing CFL line segments on top of the IV magnitude.

ss) The user saves the output.

Additional:

tt) The user selects CCI ECV data products from a checklist (geophysical quantities: sea ice extent, sea surface temperature, glacier area, cloud cover).

uu) The user selects the Operation “Co-Registration” from the Operation Category “Geometric Adjustment”.

vv) The user selects the particular options (Co-Registration method: spline, propagation of uncertainties analysis).

ww) The user executes the Operation.

xx) The Toolbox performs a co-registration of the datasets onto the coordinate system of the SEC data.

yy) The user selects the Operation “Spatial Subsetting” from the Operation Category “Subsetting and Selections”.

zz) The user selects options.

aaa) The user executes the Operation.

bbb) The Toolbox creates a spatial subset of the data.

ccc) The user selects the Operation “Temporal Subsetting” from the Operation Category “Subsetting and Selections”.

ddd) The user selects start and end years of a time period.

eee) The user executes the Operation.

fff) The Toolbox creates a temporal subset of the data.

ggg) The user selects the Operation “Product-Moment Correlation (Pearson)” (Operation Category “Data Intercomparison”, Operation Subcategory “Correlation Analysis”).

hhh) The user selects options (map, multiple data products).

iii) The user executes the Operation.

jjj) The Toolbox calculates the correlations statistics and displays correlations maps as new layers.

Use Case #22 Analysis of Equatorial Aerosol and Cloud Features using Hovmöller Diagrams

User Characteristics: User Level 1 High-level expert user (User Community 2 earth system science community)

Problem Definition:

A scientist wants to analyse the relation of aerosols and clouds in the equatorial region (5° S–5° N) by means of Hovmöller diagrams displaying the equatorial mean value as portion of the mean value over all latitudes for cloud fraction and aerosol optical depth (y-axis e.g. months since 1980, x-axis longitudes e.g. 100° W–80° E).

Exemplary Workflow:

a) The user selects CCI data products from a checklist (geophysical quantities e.g. cloud cover, cloud optical thickness, aerosol optical depth, absorbing aerosol index, aerosol type).

b) The user selects the Operation “Co-Registration” from the Operation Category “Geometric Adjustment”.

c) The user selects the particular options (Co-Registration method: spline, propagation of uncertainties analysis).

d) The user executes the Operation.

e) The Toolbox performs a co-registration of one dataset onto the coordinate system of the other.

f) The user selects the Operation “Temporal Subsetting” from the Operation Category “Subsetting and Selections”.

g) The user selects start and end years of a time period.

h) The user executes the Operation.

i) The Toolbox creates a temporal subset of the data.

j) The user selects the “Hovmöller Analysis” Operation from the Operation Subcategory “Temporal Comparison” (Operation Category “Univariate Descriptive Statistics”).

k) The user enters the calculation specification x’(lon)=wmean(x(lon, lat=[-5.;+5.]))/wmean(x(lon,lat=-90.;+90.)) and selects options (diagram, multiple data products)

l) The user executes the Operation.

m) The Toolbox calculates the requested values in form of new matrixes of the dimensions time and longitude and displays side-by-side Hovmöller diagrams.

n) The user saves the plots as PNG as well as PDF files

Appendix F Estimation Use Case Timeliness for the Use Cases

Table F-1 shows an estimation of the maximum time users might expect for the task of a particular Use Case to be carried out. It does not depict a strict determination but rather a rough guideline.

The estimation is conducted by examination of the Use Cases with respect to the extent of data acquisition, data adaption, computation and visualisation. A dash means that the particular functionality is not included in the Use cases. The number of plus signs describes the amount of time needed for carrying out the respective functionality from small (+) to intermediate (++) to large (+++).

Table F-1: Estimation of Timeliness for the Use Cases treated in the CCI Toolbox URD.

UC	Data Acquisition	Data Adaption	Computation	Visualisation	User Accepted Timeliness
1	+++ (multi CCI, non-CCI, model)	+++	++	++	Hours–days
2	+	-	+	+	Minutes
3	+++	+++	++	+	Hours
4	+	+	+	+	Minutes

UC	Data Acquisition	Data Adaption	Computation	Visualisation	User Accepted Timeliness
5	+	-	+	+	Minutes
6	+ (+++)	-	+ (+++)	++	Minutes (SSTA) Hours (MEI)
7	++	+	+	+	Minutes
8	+++ (meta data acquisition)	++	-	-	Hours (less/more depending on meta data acquisition)
9	+	+	+	+	Minutes (depending on size of area/pixel count)
10	++	+	+	+	Minutes–hours (depending on number of datasets, size of AoI)
11	++	++	-	+	Minutes
12	++	+	++	+	Hours–days
13	++	+	++	+	Hours–days
14	++	+	++	+	Hours–days
15	++	+	+++	+	Hours–days
16	++	+	+(+)	+	Minutes–hours
17	++	+	+	+	Hours
18	+	(+)	+++	+	Hours–days
19	-	-	-	+	Minutes
20	+++	++	+++	+	Days
21	+	++	+	+	Minutes–hours
22	+	+	+	+	Minutes

Appendix G User Requirements (Excel table)

Appendix G will be provided in a separate Excel document: [AD-4].

Appendix H List of TBCs and TBDs

Table H-1 lists questions and issues to be answered or discussed during the evolution of this URD.

Table H-1: List of TBCs and TBDs

Will CLI only be capable for XML? -> SoW [R-CL1]	EP confirmed that there was a need to de-couple the toolbox functions from the control of the toolbox so that it can be controlled remotely
Will API only be capable for CCI Toolbox native language, python and R?	
Which format options shall be available for input, output, images, tables ….	
Which functionalities shall be embedded and which shall be included by the use of plug-ins/API scripts? e.g. complex computations like EOF analysis / Statistical inference (PDF, ANOVA, …) / Ensemble statistics	
Regarding user community 7 knowledgeable public: is the use by industry, commercial companies etc. scope of CCI Toolbox?	
"Ice Sheet Analysis" operation (page **Error! Reference source not found.**) -> how is the vector magnitude calculated, which tools are needed for this?	
UC1: can the upper ocean heat content (0–700 m) be deduced from sea water temperature	

Appendix I State of the Art Analysis

See [AD-3]