TITLE:

Ozone_cci

System Specification Document
SSD

Reference: Ozone_cci_DLR_SS_01_00

Date of issue: 2015-04-22

Version: 01.00

Phase 2, Task 5

Deliverable: D3.1

WP Manager: M. Wolfmüller
WP Manager Organization: DLR-EOC
Other partners:
EOST: BIRA, CHALM, DLR-, FMI, KIT, KNMI, RAL, UBR, ULB, UofT, UofS

DOCUMENT PROPERTIES

Title	SSD
Reference	Ozone_cci_DLR_SS_01_00
Issue	01
Revision	00
Status	Draft
Date of issue	2015-04-22
Document type	System Specification Document

	FUNCTION	NAME	DATE	SIGNATURE
LEAD AUTHOR	WP Manager SET	M. Wolfmüller	02/03/2015	Original in hands of PM
CONTRIBUTING AUTHORS				
		W.Som de Cerff		
		Ronald van der A		
		Christophe Lerot		
		Diego Loyola		
		Georgina Miles		
		Pierre-Francois Coheur		
		Viktoria Sofieva		
		Alexandra Laeng		
		Nabiz Rahpoe		
		Kaley Walker		
		Chris Roth		
		Nathalie Kalb		
REVIEWED BY				
ISSUED BY	WP Manager SET	M. Wolfmüller		

DOCUMENT CHANGE RECORD

Issue	Revision	Date	Modified items	Observations
00	01	20/09/2014	-	Creation of document
00	05	08/12/2014	all	First version for internal iteration
00	06	01/03/2015	all	Second version for internal iteration
00	07	19/03/2015	several chapters	contributions from Christoph Lerot, Ronald van A, Viktoria Sofieva
00	07	31.03.2015	several chapters	contributions from Rosa Astoreca, Georgina Miles, Viktoria Sofieva, Nabiz Rahpoe
00	07	09.04.2015	several chapters	contributions from Nabiz Rahpoe, Alexandra Laeng, Diego Loyola, Chris Roth
00	08	21.04.2015	all	consolidation of SSD
01	00	22.04.2015	all	SSD 1.0

Executive Summary

The System Specification Document (SSD, deliverable D3.1) specifies the design of the operational sytsem in order to generate and provide the Ozone ECV data products operationally. It includes an overall description of the main functions and scenarios. It consists of already available subsystems distributed over serveral organizations.

The new products created in this context are ozone Essential Climate Variables, which are used for an assessment of climate forcing, health impact and other environmental issues.

SSD - System Specification Document

This document specifies the system requirements for the CCI O3 system.

TABLE OF CONTENTS

Figures

Tables

1 Introduction

1.1 Scope and Applicability

This document describes the operational Ozone_CCI production system in order to handle the complete production processes and product provision procedures for the Ozone ECV products. It also includes information regarding lifecycle and possible hardware solutions. The system specification in this document is based on a System Requirements analysis [AD4] which was derived from the User Requirements [RD2] and Product Specifications [AD5] of the Ozone_cci project, but nevertheless it is general enough to be able to support the processes of other CCI projects.
The system specification does not inculde specifications needed for the product validation processes.
The phase II processing system consists in a decoupled and fully distributed system spread over several organizations where each contributor provides existing systems for the generation of the committed ozone data sets. Based on this architecture, the following ECV parameters will be generated:
The production processes shall ensure the generation of the following ozone ECV parameters:

- Total Ozone from UV nadir instruments,
- Tropical Tropospheric Ozone Column from UV nadir instruments,
- Low vertical resolution ozone profiles from nadir sensors and
- Stratospheric and upper tropospheric ozone profiles from limb and occultation types of sensors

The Ozone ECV products shall be generated using the following data sets:

- Input data from GOME, SCIAMACHY, GOME-2A, GOME-2B, OMI and OMPSfor total ozone ([CR1], in [AD1] chapter 1.2).
- Input data from GOME, GOME-2A, and GOME-2B for tropical tropospheric ozone column ([CR1], in [AD1] chapter 1.2).
- Input data from GOME, SCIAMACHY, GOME-2, OMI and IASI for Ozone nadir profiles ([CR1], in [AD1] chapter 1.2)
- Input data from MIPAS, GOMOS, SCIAMACHY, OSIRIS, SMR, ACE, SAGE II and HALOE for the generation of ozone limb profiles ([CR1], in [AD1] chapter 1.2) and optionally TPM.

1.2 Conventions

tbc

1.3 Definitions, Acronyms and Abbreviations

Terms, definitions and abbreviations are collected within this document.

1.3.1 Terms and Definitions

Term	Explanation of the term
Nominal Operation	The day to day operations, 98% of the time the system is operational
Ozone_cci	project for the development of the CCI ECV Ozone
Processor	Software algorithm running in the Ozone_cci system to produce intermediate or ECV products according the Product Specification Document ([AD5])
Status Feedback	Automated status reports generated by the Ozone_cci system and provided to the Ozone_cci operator

1.3.2 Abreviations

abbreviation	Explanation of the abbreviation (tbc)
API	Application Programming Interface
ADM	Algorithm Development Management
CCI	Climate Change Initiative
CRG	Climate Research Group
CMUG	CCI Climate Modelling User Group
DARD	Data Access Requirements Document
ECMWF	European Centre for Medium-Range Weather Forecasts
ECV	Essential Climate Variable
EOST-1	EO Science Team for Total Column and Nadir Prodfile within the Ozone_cci project
EOST-2	EO Science Team for Limb Profile within the Ozone_cci project
ESA	European Space Agency
EUMETSAT	European Organisation for the Exploitation of Meteorological Satellites
GMES	Global Monitoring for Environment and Security is the European Programme for the establishment of a European capacity for Earth Observation
HMI	Human Machine Interface
KNMI	Royal Netherlands Meteorological Institute
LP	Limb Profile
NASA	National Aeronautics and Space Administration
NP	Nadir Profile
O3	Ozone
O3TC	Ozone Total Column
O3NP	Ozone NadirProfile
O3LP	Ozone Limb Profile
OMI	Ozone Monitoring Instrument (aboard EOS-Aura)
OS	Operating System
PDU	Product Dissemination Unit
PSD	Product Specification Document
PM	Production Management
VALT	Validation Team or Group
VQM	Validation & QA Management
SET	System Engineering Team within the Ozone_cci project
UPAS	Processor for Atmospheric Spectrometers
tbc	to be collected
tbd	to be defined (shall be defined later if the information is available)
TC	Total Column

1.4 Applicable Documents

[AD1] Ozone_cci Phase-II Technical Baseline, ESA RFQ 3-13904/13/I-NB , 26/09/2013

[AD2] CCI System Requirements v1, CCI-PRGM-EOPS-TN-12-0031, 13 June 2013. Available on line at: http://46.137.76.174/?q=webfm_send/72.

[AD3] Data Standards Requirements for CCI Data Producers v1.1, CCI-PRGMEOPSTN-13-0009, 24 May 2013. Available on line at: http://46.137.76.174/?q=webfm_send/76.

[AD4] SSD, Ozone_cci System Specification Document, available from http://www.esa-ozone-cci.org/?q=documents [public/deliverables]System Requirements Document from Phase 1

[AD5] Product Specification Document (PSD)

[AD6] Data Access Requirement Document (DARD, WP 1113)

1.5 Reference Documents

[RD1] CCI guidelines from the colocation meeting 1, Issue 1.0, EOP-DTEX-EOPS-SW-10-0002, 05/11/2010

[RD2] User Requirements Document

[RD3] Input Output Definition Document (IODD)

[RD4]

1.6 Document Overview

Chapter 2 contents the purpose and the scope of the Ozone_cci system.
Chapter 3 describes the design approach.
Chapter 4 gives an overview about the Ozone_cci system.
Chapter 5 lists the fundamental operations and the main operational scenarios.
Chapter 6 shows the component descoposition.
Chapter 7 gives an overview about the input, intermediate and output products which are handled during CCI phase 1 and 2.

2 General Description

2.1 Relation to Current Projects

The ESA sensors GOME, SCIAMACHY, GOMOS and MIPAS as well as the EUMETSAT sensor GOME-2 will be used in first priority to develop optimised ozone Essential Climate Variables (ECVs). Wherever feasible, ESA Third-Party Missions (TPM) and non-ESA missions will be included as well to further enhance the merged data sets. In particular, the OMI and OMPS instruments will be used to generate total ozone level-2 data sets, which, in turn, will be included in the merged data record. Also OMI will be included in the merged ECV data series for nadir profiles, while the NASA TOMS, SBUV and SAGE-II data sets will be used to validate the European ozone ECV.
The focus of the Ozone_cci project will be on developing three ozone ECVs, namely (1) total ozone from UV nadir instruments, (2) ozone profiles from nadir sensors and (3) ozone profiles from limb and occultation types of sensors. These ozone ECVs will be optimised to approach as closely as possible the GCOS requirements. To this aim, level-2 ozone retrieval and data merging algorithms will be developed and optimised, making best use of multi-sensors data archives in particular from ESA instruments. Corresponding data products will be generated, characterised, validated and assessed for their climate relevance.

2.2 Function and Purpose

The operational Ozone_cci system shall generate the ozone ECVs as specified in the PSD ([AD5]) according to the requirements stated in the URD ([RD2].). The ECVs shall be based on existing level 1 and /or level 2 data and auxiliary data. Level 2 processing and re-processing shall be possible if required in order to generate the ozone ECV output products defined in the PSD ([AD5]).
The system specified in this document is based on a System Requirements analysis [AD4], which was derived from the User Requirements [RD2].

2.3 Relation to other Systems and End Users

The interfaces of the Ozone_cci system to external entities are illustrated in Figure 4-2 A complete list of all the data sources and data providers is defined in the DARD [AD6]. The Ozone_cci system requires interfaces to organizations which provide level 1 and ancilliary data for generating the ECV products, and to organizations which provide ground-based reference data for validation procedures. A complete list of all output products is given in the PSD [AD5]. These output products shall be provided to the predefined end users.

3 Design Approach

This chapter describes the approaches used for the descriptions of the scenarios, system components and interfaces. UML diagrames are used for the description of the design. Additionally, non–UML diagrams and techniques are used where appropriate. The most often used diagrams are the context diagram and the sequence diagram.

3.1 Component Description Approach

Typically the context diagram is used in the overview of each design document to describe the usage environment of the system or the system components. Data/control flow diagrams are used where complex structures of components or elements interact together.

After decomposition of Ozone_cci system into individual subsystems and components each of those subsystems is described as follows:

- Description
- Components or Processors
- Functions
- Interfaces
- Hardware

3.2 Scenario Description Approach

Sequence diagrams are used to describe the main usage scenarios relying on the functionality provided by the actors like operators, the system, components or elements.

Scenarios are sequences of events and activities for different use cases of a system. They describe the functions of a system on a certain level of abstraction. The scenarios for the Ozone_cci system are described, using the following approach:

- First, a short description is given on how the corresponding scenario is initiated and its purpose and scope.
- Optionally a sequence diagram is givenand
- Finally, the flow of actions is described in a bulleted list, as an explanation to the sequence diagram.

3.3 Interface Description Approach

Each interface may consist of one or more interface items. The interface items are subdivided according to inputs and outputs of the subsystem.
An interface item covers an individual file, product or a method which is exchanged between components. A file or a product is easily understood as an interface item. A method is based on the concept of a client/server model.
The System Specification document lists all existing internal and external interfaces and interface items. The interface items of type product or file (auxiliary data) are described in three documents:

- the Product Specification Documents (PSD [AD4])
- the Data Access Requirement Document (DARD [AD6])
- the Input Output Definition Document (IODD [RD3]).

The PSD describes the format and content of the ECV output products. The DARD describes all external inputs which are required within the Ozone_cci system to be able to generate the required ECV output products.
The IODD describes all internal interface items which are transferred between the Ozone_cci components and the external interfaces to the users. Each interface item is specified by a fixed set of fields. Products are special kinds of interface items insofar as they are archived or distributed to users and / or external entities e.g. validation systems. Therefore, a product specification is required to inform its users about the specific properties and performance characteristics of these products and to provide a detailed format specification which in general is much more sophisticated than for a normal interface item.

4 System Overview

The design of the Ozone_cci System is fundamentally influenced by the separation of the system functionality in four functional domains:

- Processing Domain
- Product Handling Domain
- Management Domain

Each functional group in the functional decomposition is implemented by one or more dedicated service components. The functional groups and their components will be introduced in the subsections following this introduction.

The **Processing Domain** groups the functions regarding the product processing.
The Ozone_cci production system is defined by the use of already existing processing systems which are spread over different organizations. Each processing system is responsible for the production of one or more complete data sets which are either final or which are used by a subsequent processing step.

The **Product Handling Domain** is reduced to the provision of the generated data sets on an ftp server at BIRA in order to provide intermediate data sets to subsequent ozone_cci processing systems and to provide all generated output products via online access to the users.

The **Management Domain** groups the management functions for the organization of the production and dissemination.

The Processing and the Product Handling Domains are subdivided into technical components. However, the Management Domain is substituted into administrational components.

4.1 System Overview

Figure 4-1 shows the technical and administrational components of the Ozone_cci system. The administrational components are responsible for specific organisational operations. The technical components are provided by the specific science teams.

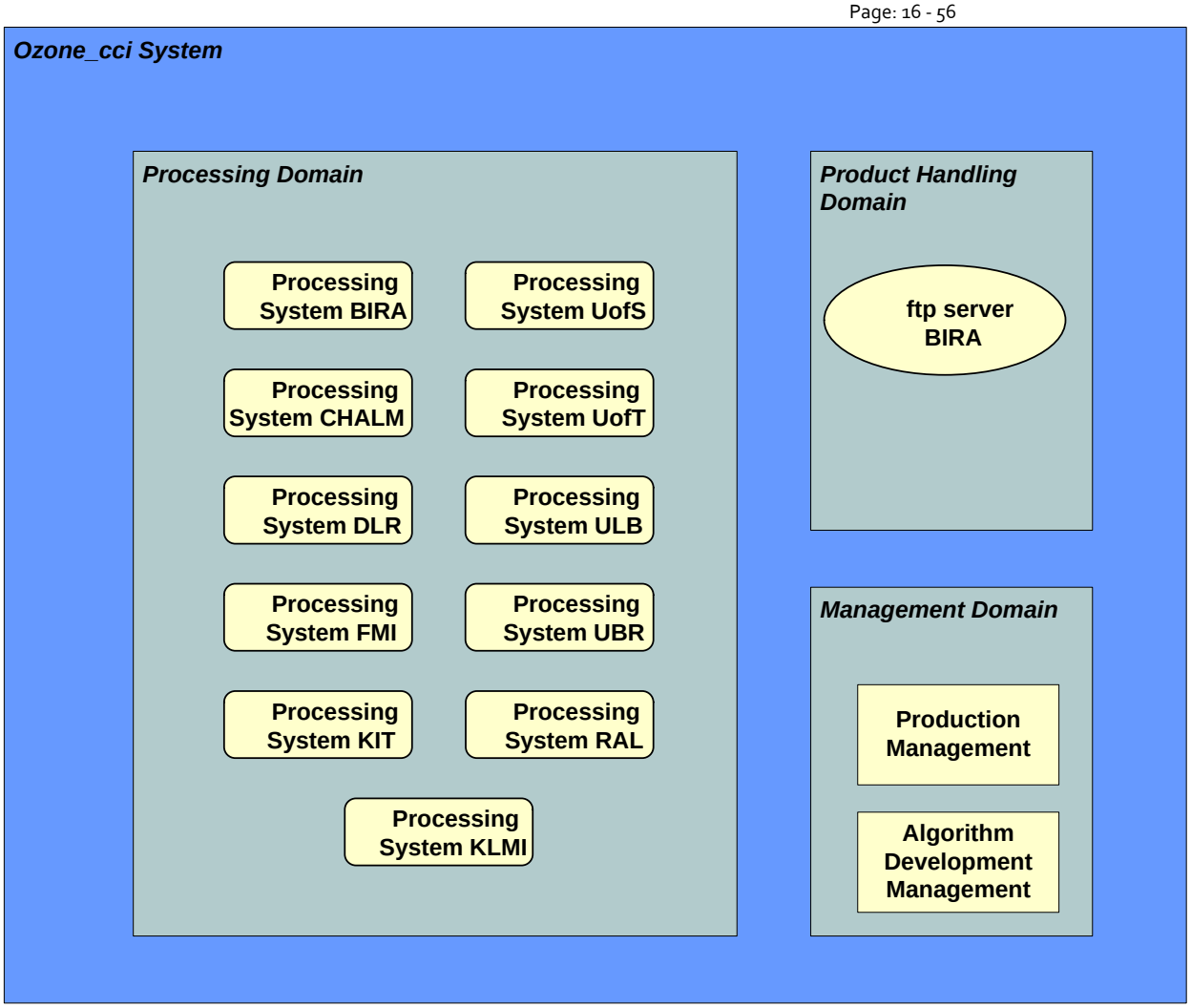

Figure 4-1 Ozone_cci System Decomposition into Domains

A detailed description of the functionality of the Ozone_cci components are described in chapter 6. An overview about their main functionalities is given in the following subchapters.

4.1.1 Processing Domain

The Processing Domain consists of:

- Processing System BIRA
- Processing System CHALM
- Processing System DLR
- Processing System FMI
- Processing System KIT
- Processing System KLMI
- Processing System RAL
- Processing System UBR
- Processing System ULB
- Processing System UofT
- Processing System UofS

4.1.1.1 Processing System BIRA

This system generates the L2 TC products from GOME, SCIA, GOME-2A, GOME-2B, OMI and OMPS L1 input data. The granularity is one orbit, there will be one L2 product per sensor/orbit. The system ensures the different steps necessary to the L2 TC production: ingestion of L1 and auxiliary data, processing of L1 data into L2 TC data, formatting of L2 product and uploading on the product handling domain.

4.1.1.2 Processing System DLR

This processing system takes as input the L2 TC products and generates the L3 TC products containing gridded monthly mean total ozone data separately for each sensor. Finally it merges these L3 TC products by applying spatial and temporal drift corrections in order to create the final TC ECV from all available sensors.
Additionally to the TC products this system is also capable to generate the L3 TTOC Products from L2 TC and cloud products created at DLR from GOME, GOME-2A, and GOME-2B L1 input data.

4.1.1.3 Processing System RAL

This system generates the L2 NP products from GOME, SCIA, GOME-2A, GOME-2B and OMI L1 input data. The granularity is one orbit, there will be one L2 product per sensor/orbit. The system ensures the different steps necessary to the L2 TC production: ingestion of L1 and auxiliary data, processing of L1 data into L2 TC data, formatting of L2 product and uploading on the product handling domain.

4.1.1.4 Processing System KNMI

This system uses the NP L2 products in order to generate NP L3 and L4 products. For the processing also meteorological data from ECMWF has to be available.

4.1.1.5 Processing System ULB

This system generates the L2 NP products from the IASI L1 input data. The granularity is one PDU. For the processing IASI level 2 meteorological data have to be available..

4.1.1.6 Processing System CHALM

This system generates the harmonized L2 LP and the L2 MLT products from the SMR L2 input data.

4.1.1.7 Processing System FMI

This system generates the harmonized L2 LP products, the L2 UTLS products and the L2 MLT products from the GOMOS L2 input data. Additionally on the basis of the harmonized L2 LP products all L3 Limb Profile products from all defined sensors are generated. Finally the resulting L3 Limb Profile products are merged to create multi-instrument L3 data.

4.1.1.8 Processing System KIT

This system generates the harmonized L2 LP, the L2 UTLS and the L2 MLT products from the MIPAS L2 input data. Additionally the MIPAS L3 MLT products are generated and finally merged together with the GOMOS, SMR and ACE L3 MLT products to the merged L3 MLT products.

4.1.1.9 Processing System UBR

This system generates the harmonized L2 LP and the L2 UTLS products from the SCIA L2 input data. Additionally the harmonized L2 LP products for OMPS, MLS, SAGE II and HALOE are generated within this system.
The system includes also the LNTOC Processor in order to generate the LNTOC products for ENVISAT and OMPS.

4.1.1.10 Processing System UofT

This system generates the harmonized L2 LP and the L2 UTLS products from the ACE L2 input data. Additionally the L2 and L3 MLT products are generated for ACE.

4.1.1.11 Processing System UofS

This system generates the harmonized L2 LP and the L2 UTLS products from the OSIRIS L2 input data.

4.1.2 Product Handling Domain

Product management is mainly provided by the ftp server at BIRA for an online access of all generated Ozone_cci .output products.
The online access provides the access of predefined data sets directly to the user via an ftp pickup point. The product provision is organized using a predefined hierarchical directory structure containing the CCI projects, product types and directory paths which are defined within the PSDs.

4.1.3 Management Domain

4.1.3.1 Production Management

Production Management provides tools and procedures for the operator to handle the system processes and to allow data access to the users. It is an organizational component which is responsible for the organization, monitoring and operation of all defined production and dissemination processes. The production processes itself are individually defined and handled by the processing systems in its organisations. The methods for the provision of the data to the external users act in accordance to the Data Standards for CCI Data Producers ([AD3]). The user access to the data is described on the Ozone CCI web page http://www.esa-ozone-cci.org.

4.1.3.2 Algorithm Development

This component is responsible to trigger and organize the whole work which is necessary to bring a new algorithm/processor into operation. This includes the development, testing, installation and system update and the validation. These procedures and tasks are defined and handled by the Science Team 1 and 2 (EOST-1 and EOST-2) and are coordinated via the Core Management Team (CRG).

4.2 External Interfaces

Figure 4-2 shows the main information which is exchanged by the external interfaces of the Ozone_cci system.

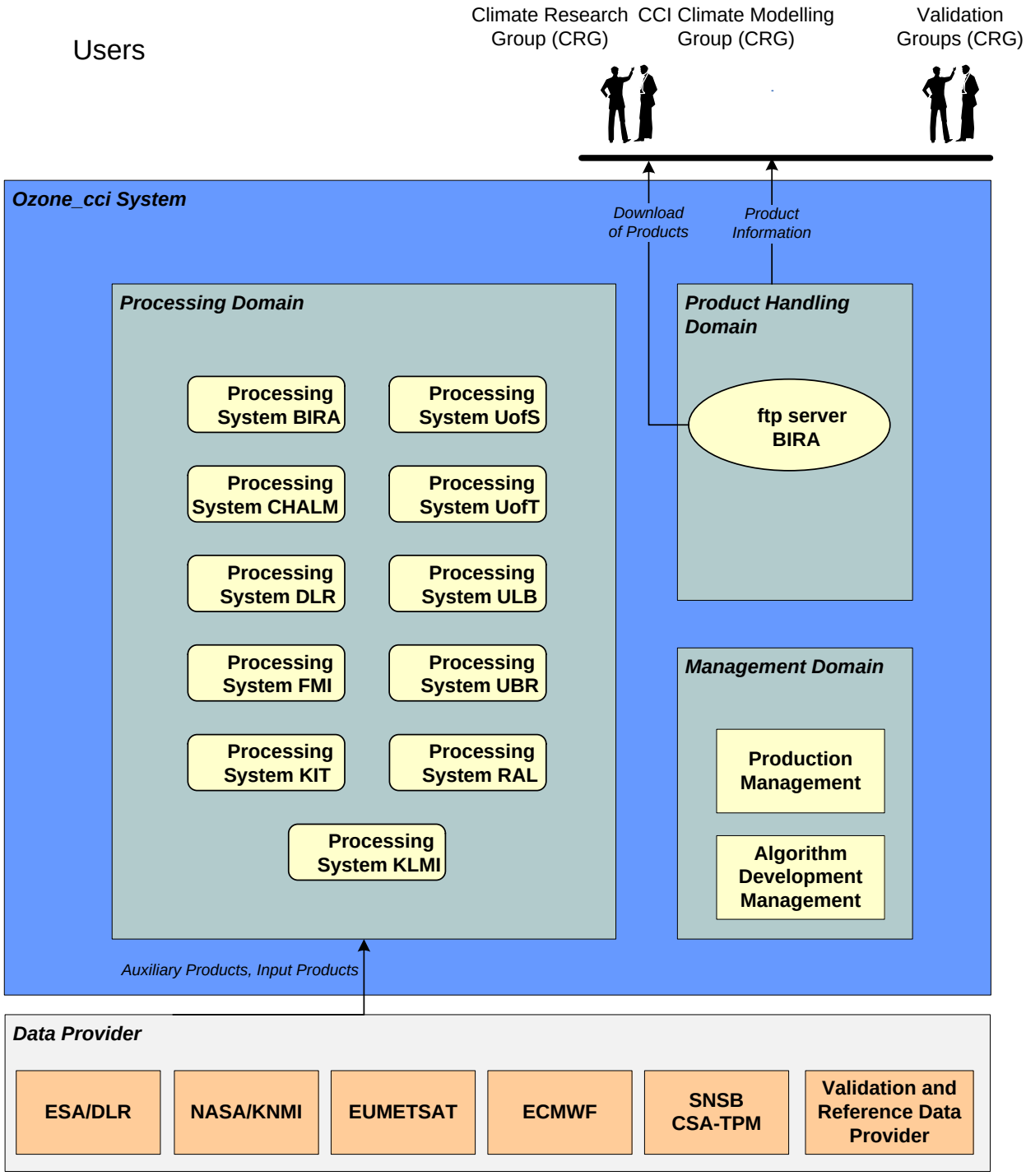

Figure 4-2 Overview to External Interfaces of the Ozone_cci system

There are three types of external interfaces:

- **The interfaces to the data providers** in order to get all required input and auxiliary products needed for the internal production and processing chains:
  The input and auxiliary products are ingested by the specific processing systems from data providers using its proprietary ingestion services and procedures. The organization of the formal data procurement has to be done by the specific science teams itself. All required input data are listed and described within the DARD ([AD6]).
- **User Interface (UserIfc) to support the online access of the ECV products to the end users:**
  The user interface is defined to provide the output products of the system to the external users

(e.g. the Climate Research Group or the Climate Modelling Group) via online access. All output products which are provided to the users are described within the PSD ([AD5]).

- Science and Algorithm/Processor Interface (Science&AlgorithmIfc to support the algorithm/processor improvement and development tasks:
  The science and algorithm/processor interface defines the management activities which are needed to organize and improve the algorithm/processor development and integration tasks.

4.3 Main Internal Interfaces

Figure 4-3 shows the main information which are exchanged by the internal interfaces.

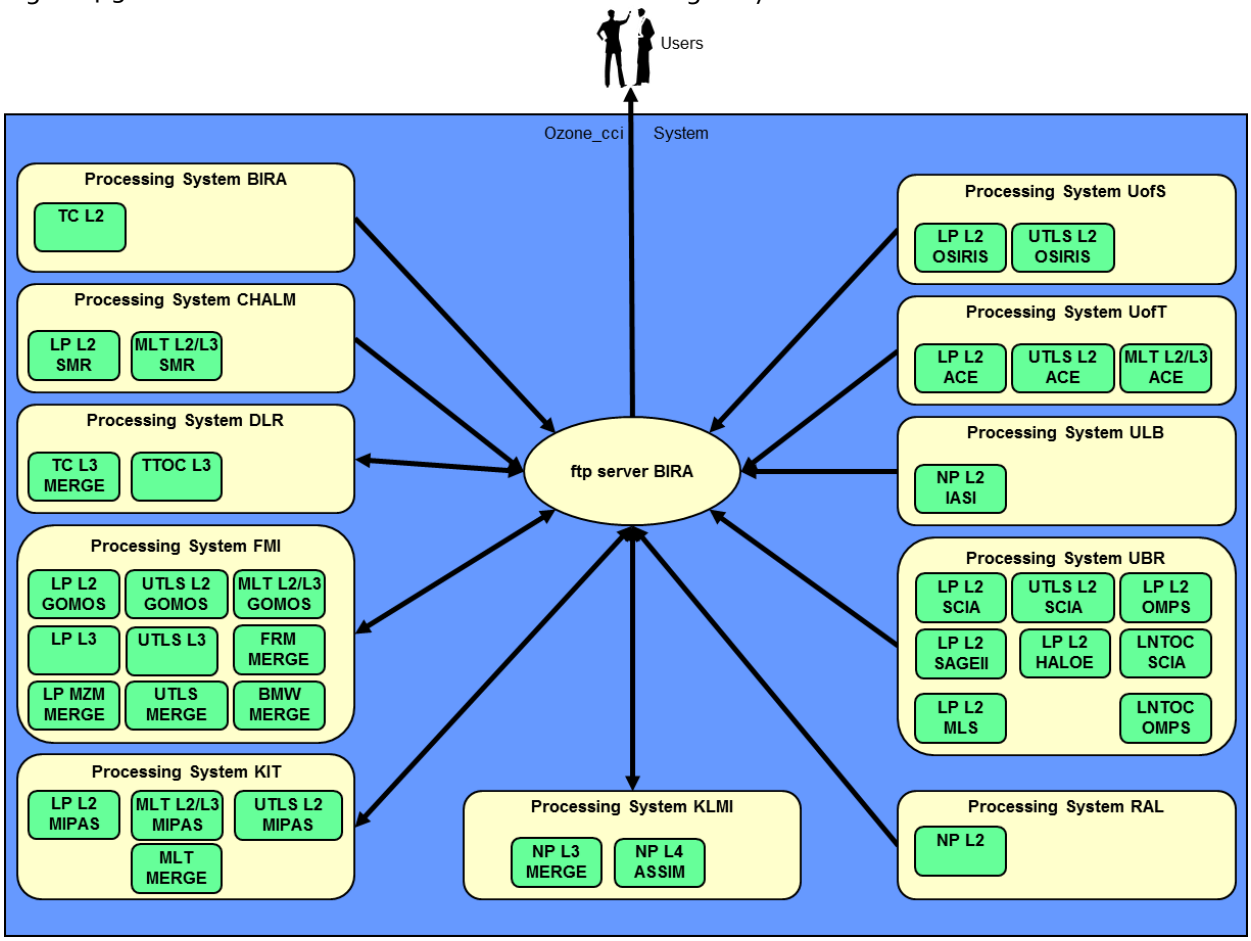

Figure 4-3 Ozone_cci System Decomposition with main Internal Interfaces

A detailed description of the interfaces and interface items is given in chapter 6 . The main internal interfaces are the interfaces to transfer the output products generated from one processing system to a subsequent processing system which needs these generated output products. The ftp server at BIRA provides the interfaces for these products transfer. In practices these products transfers are often handled directly by the production operators between the involved processing systems.

4.4 Ozone_cci Users

The Ozone_cci system interacts with the following users/operators:

- **Ozone_cci System Operator**
  For each Ozone_cci processing system the system operator is responsible for the installation, configuration and acceptance testing of the processors into the specific processor system.
- **Ozone_cci Production Operator (Member of Production Management)**
  The production operator is responsible to organize, schedule, execute and monitor all defined

production processes within a specific processing system. He shall be able to start, restart, stop or cancel all predefined processing or reprocessing scenarios. He generates reports and monitors the data provision and dissemination and handles all defined QA processes.

- **Ozone_cci System Engineer (Member of Algorithm/Processor Development Management)**
  The System Engineer is responsible to exchange processors or algorithms of the Ozone_cci system which are developed by the scientists.
- **Ozone_cci Scientist (Member of Algorithm/Processor Development Management)**
  The scientist develops algorithms/processors for the production and the quality control of the produced ECV products.
- **ECV User (external)**
  The ECV end user searches and gets the ECV data products from the Ozone_cci system.

5 Scenarios (Use Cases)

5.1 Fundamental Operations and Scenarios

This chapter describes the overall scenarios of the Ozone_cci system which are necessary to ensure the required ECV parameter production. The following table give an overview about all products which can be generated by the Ozone_cci system.

L2 Data Product	Processing Facility	Processing Results in Phase 2
TC_L2_GOME	BIRA	L2 total ozone product from GOME (1 file/orbit) for theperiod 1995-2011
TC_L2_SCIAMACHY	BIRA	L2 total ozone product from SCIAMACHY (1 file/orbit) for the period 2002-2012
TC_L2_GOME2A	BIRA	L2 total ozone product from GOME-2A (1 file/orbit) for the period 2007-2016
TC_L2_GOME2B	BIRA	L2 total ozone product from GOME-2B (1 file/orbit) for the period 2013-2016
TC_L2_OMI	BIRA	L2 total ozone product from OMI (1 file/orbit) for the period 2004-2016
TC_L2_OMPS#	BIRA	L2 total ozone product from OMPS (1 file/orbit) for the period 2012-2016
NP_L2_GOME	RAL	L2 ozone nadir profile product from GOME (1 file/orbit) for the period 1995-2011
NP_L2_SCIAMACHY	RAL	L2 ozone nadir profile product from SCIAMACHY (1 file/orbit) for the period 2002-2012
NP_L2_GOME2A	RAL	L2 ozone nadir profile product from GOME-2A (1 file/orbit) for the period 2007-2016
NP_L2_GOME2B	RAL	L2 ozone nadir profile product from GOME-2B (1 file/orbit) for the period 2013-2016
NP_L2_OMI#	RAL	L2 ozone nadir profile product from OMI (1 file/orbit) for the period 2004-2016
NP_L2_IASI	ULB	L2 Ozone nadir profile from IASI for all or part of the operation periods and for all or part of the pixel
LP_L2_SCIAMACHY	UBR	L2 ozone limb profile product from SCIAMCHY for the period 2002-2012
LP_L2_OMPS#	UBR	tbd
LP_L2_MIPAS	KIT	L2 ozone limb profiles from MIPAS for the whole instrument life period, processed out of the version 7 Level 1 Spectra
LP_L2_GOMOS	FMI	The dataset is created in Phase 1
LP_L2_OSIRIS	UofS	L2 Limb Profile product from OSIRIS (1 file/day) for the period 2001-2014
LP_L2_SMR	CHALM	tbd
LP_L2_ACE	UofT	tbd

LP_L2_SAGE II	UBR	tbd
LP_L2_HALOE	UBR	tbd
LP_L2_MLS	UBR	Production phase started, for L2 MLS Aura limb profile production for the period 2004-2011
UTLS_L2_SCIA	UBR	tbd
UTLS_L2_MIPAS	KIT	tbd
UTLS_L2_GOMOS	FMI	The related studies are ongoing
UTLS_L2_OSIRIS	UofS	L2 UTLS product from OSIRIS (1 file/day) for the period 2001-2014
UTLS_L2_ACE	UofT	tbd
MLT_L2_MIPAS_DN_DCA*	KIT	tbd
MLT_L2_GOMOS_DN_DCA*	KIT	tbd
MLT_L2_ACE_DN_DCA*	UofT	tbd
MLT_L2_SMR_DN_DCA*	CHALM	tbd
MLT_L2_MIPAS_SM#	KIT	tbd

Table 5-1 L2 Products

L3/L4 Data Product	Processing Facility	Processing Results in Phase 2
TC_L3_MRG	DLR	
NP_L3_MRG	KNMI	Global monthly-mean 3D ozone fields from combined GOME, SCIAMACHY, GOME2 and OMI L2 data
NP_L4_ASSIM	KNMI	Global 6-hourly 3D ozone fields from combined GOME, SCIAMACHY, GOME2 and OMI L2 data
TTOC_L3_GOME	DLR	tbd
TTOC_L3_GOME2A∞	DLR	tbd
TTOC_L3_GOME2B∞	DLR	tbd
LNTOC_L3_ENVISAT	UBR	Available for SCIA-SCIA on UBR ftp server for for test phase. Will be moved to BIRA ftp
LNTOC_L3_OMPS	UBR	tbd tbd
LNTOC_L3_OMPSG2#	UBR	tbd
LP_L3_SCIA_MZM	FMI	The dataset is created in Phase 1. If updated L2 dataset will be available, the MZM dataset will be replaced with a newer one.
LP_L3_OMPS_MZM#	FMI	tbd
LP_L3_MIPAS_MZM	FMI	The dataset is created in Phase 1. If updated L2 dataset will be available, the MZM dataset will be replaced with a newer one.

LP_L3_GOMOS_MZM	FMI	The dataset is created in Phase 1. No updates are expected in Phase 2
LP_L3_OSIRIS_MZM	FMI	Extension of the dataset with the new data are expected
LP_L3_SMR_MZM	FMI	Extension of the dataset with the new data are expected
LP_L3_ACE_MZM	FMI	Extension of the dataset with the new data are expected
LP_L3_SAGEII_MZM	FMI	tbd
LP_L3_HALOE_MZM	FMI	tbd
LP_L3_MRG_MZM	FMI	Processing of the dataset based on all available measurements
LP_L3_MRG_SMM	FMI	Processing of the dataset based on all available measurements
LP_L3_FR	FMI	Processing of the dataset based on all available measurements
UTLS_L3_SCIA	FMI	Processing of the dataset based on all available measurements
UTLS_L3_MIPAS	FMI	Processing of the dataset based on all available measurements
UTLS_L3_GOMOS	FMI	Processing of the dataset based on all available measurements
UTLS_L3_OSIRIS	FMI	Processing of the dataset based on all available measurements
UTLS_L3_ACE	FMI	Processing of the dataset based on all available measurements
UTLS_L3_MRG	FMI	Processing in Phase 2
MLT_L3_MIPAS_MZM_DN	KIT	tbd
MLT_L3_MIPAS_MZM_DN_DCA*	KIT	tbd
MLT_L3_MRG_MZM_DN	KIT	tbd
MLT_L3_MRG_MZM_DCA*	KIT	tbd

Table 5-2 Level 3 and L4 Products

5.1.1 Production of Ozone Total Column and Tropical Tropospheric Column

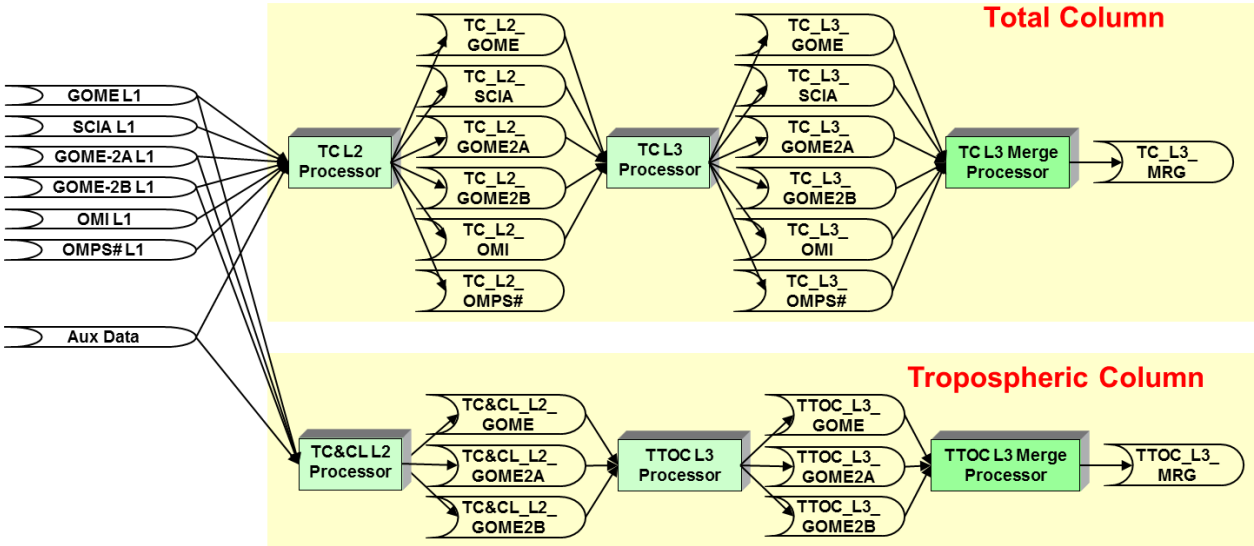

Figure 5-1 Overall ECV Production Scenarios for Total Column and Tropical Tropospheric Column

The system should be able to run the following processing steps:

- Step 1
  Ingest L1 input products from GOME, SCIAMACHY, GOME-2A, GOME-2B, OMI or OMPS.
  L1 products are consolidated orbits from ascending node to ascending node.
- Step 2 (TC L2 Processor)
  Generate and archive L2 intermediate products for GOME, SCIAMACHY, GOME-2A, GOME-2B, OMI or OMPS using the GODFIT v3 algorithm.
  One L2 product is generated for each L1 product.
- Step 3 (TC L3 Processor)
  Generate and archive L3 intermediate products for GOME, SCIAMACHY, GOME-2A, GOME-2B, OMI or OMPS.
  L3 products are gridded monthly means of a single sensor generated with all L2 products of a given month.
- Step 4 (TC L3 Merge Processor)
  Generate and archive output O3TC ECV.
  O3TC ECV products are monthly means of merged L3 products from GOME, SCIAMACHY, GOME-2A, GOME-2B, OMI or OMPS.

5.1.1.1 Partial Reprocessing Scenario for Total Column

- The system should be able to run independently single steps from the full processing scenario in order to reprocess intermediate and/or final products, i.e. partial reprocessing by running steps 2.+3.+4, or by running steps 3.+4., or by running only step 4.
  Optionally it may be decided to provide a possibility to restrict the processing according to a given time range or orbit range.

5.1.1.2 Processing Scenario for TTOC Products

The system should be able to run the following processing steps:

- Step 1
  Ingest L1 input products from GOME, GOME-2A and GOME-2B.

- Step 2 (TC&CL L2 Processor)
  Generate and archive L2 intermediate ozone and cloud products for GOME, GOME-2A and GOME2-B.
- Step 3 (TTOC L3 Processor)
  Generate and archive L3 intermediate products for GOME, GOME-2A and GOME2-B.
- Step 4 (TTOC L3 Merge Processor)
  Generate and archive output O3TTOC ECV.

5.1.2 Production of Nadir Ozone Profile ECV Parameter

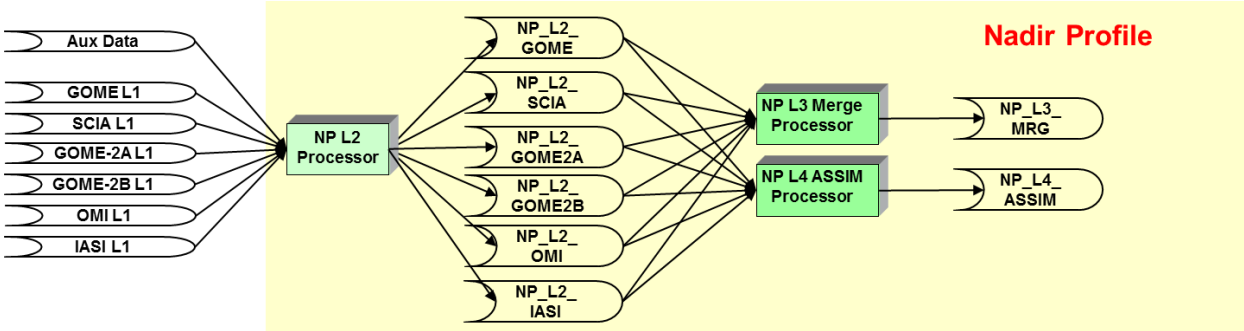

Figure 5-2 Overall ECV Production Scenarios for Nadir Profile

The production chain for Nadir Ozone Profile is shown in Figure 5-2.

5.1.2.1 Full Processing Scenario for Nadir Profile

The system should be able to run the following processing steps:

- Step 1
  Ingest L1 input products from GOME, SCIAMACHY, OMI, GOME-2 and IASI and necessary auxiliary data products (ECMWF data).
  L1 products are consolidated orbits from ascending node to ascending node.
- Step 2 (NP L2 Processor)
  Generate and archive L2 intermediate products for GOME, SCIAMACHY, OMI GOME-2 and IASI.
  One L2 product is generated for each L1 product
- Step 3a (NP L3 Merge and NP L4 ASSIM Processor)
  Generate and archive merged L3 products for the nadir ozone profiles based on all L2 data.
- Step 3ab (NP L3 Merge and NP L4 ASSIM Processor)
  Generate and archive merged L3 products for the nadir ozone profiles based on all L2 data.

The detailed processing scenarios are provided in Figure 5-3 and in Figure 5-4. Note that the required meteorological fields from ECMWF need to be pre-processed before they can be used. This is provided inFigure 5-5.

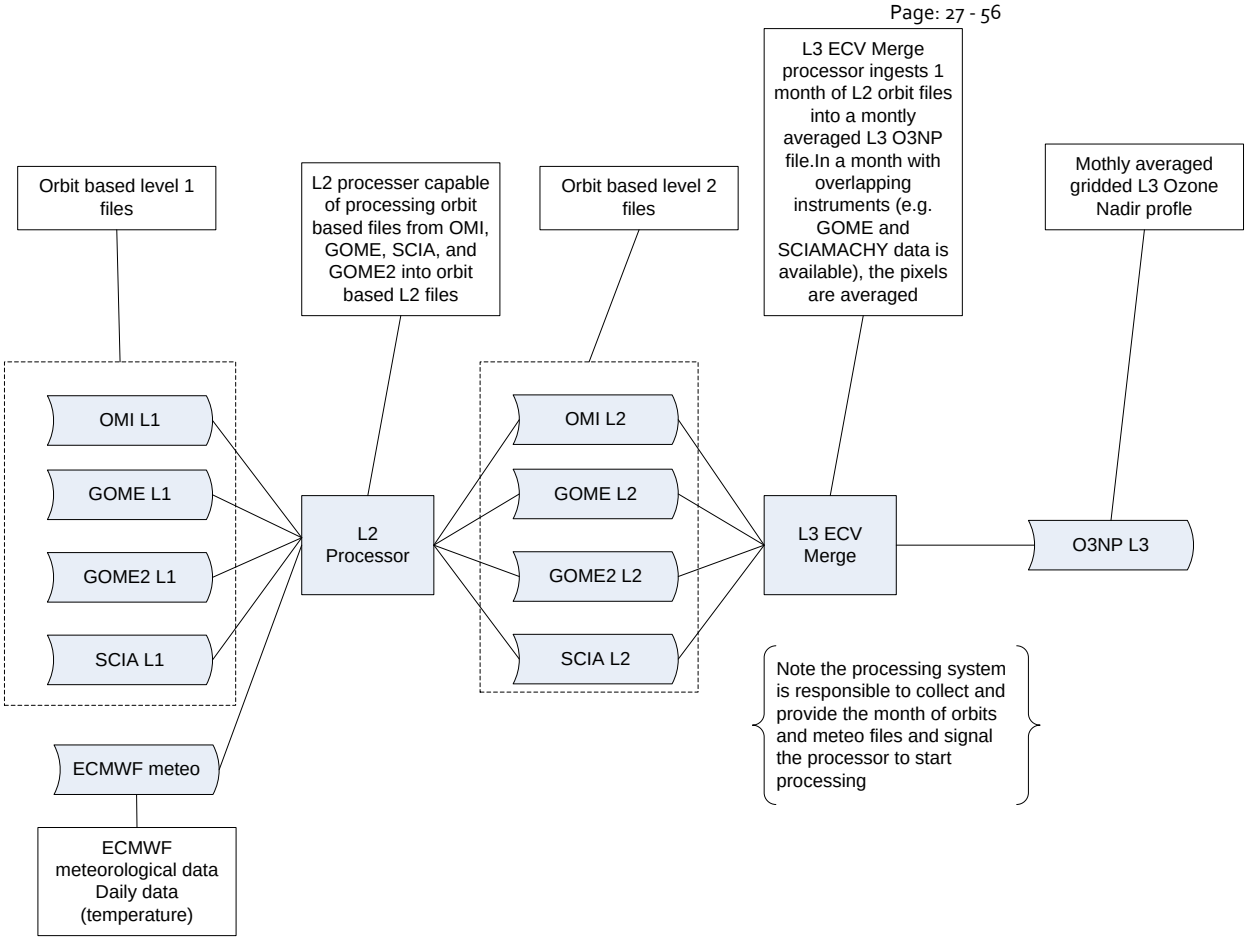

Figure 5-3 Detailed processing diagram O3NL L3

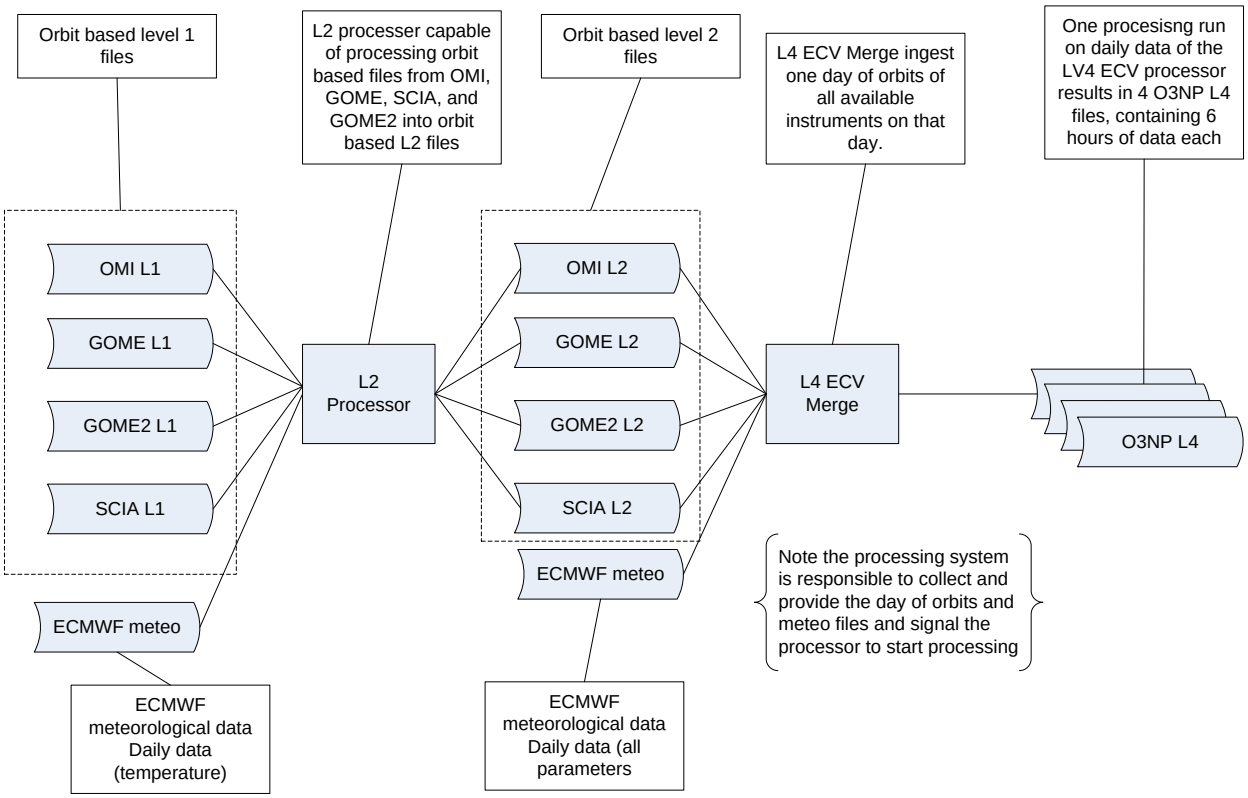

Figure 5-4 Detailed processing diagram O3NP L4

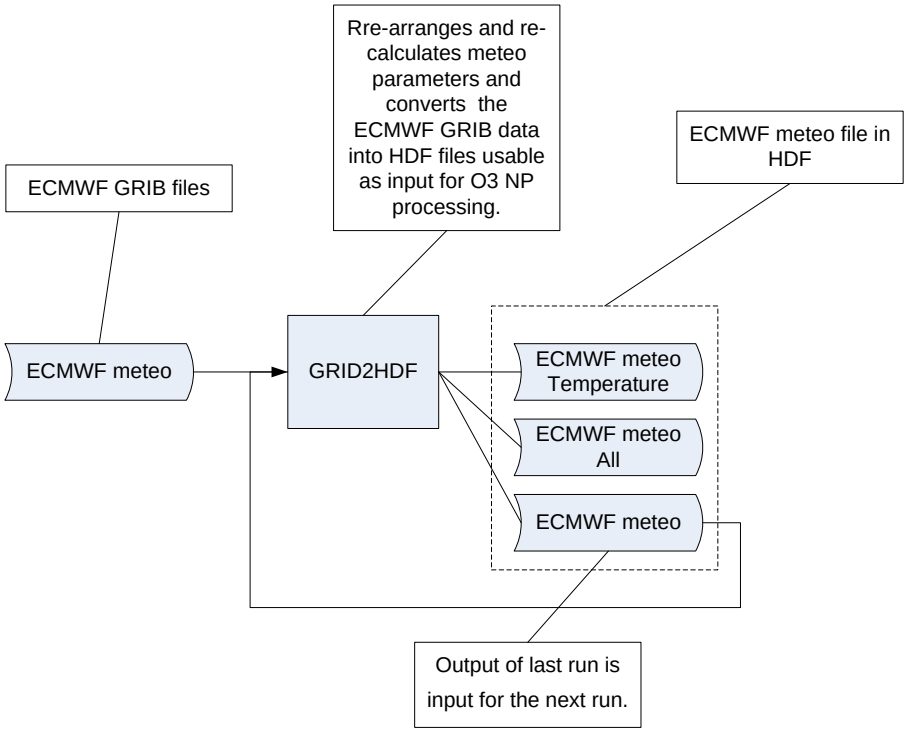

Figure 5-5 Detailed processing diagram Meteorological data

5.1.2.2 Partial Reprocessing Scenario

- The system should be able to run independently single steps from the full processing scenario in order to reprocess intermediate and/or final products, i.e. partial reprocessing by running steps 2.+ 3., or by running only step 3.

5.1.3 Production of Limb Ozone Profile ECV Parameter

The production scenarios of the Limb Profile products can be subdivided into the following scenarios:

- Production of Limb Profiles based on the harmonized Limb Profile products.
- Production of UTLS products based on the harmonized Limb Profile products.
- Production of MLT products
- Production of LNTOC products

5.1.3.1 Full Processing Scenario for the harmonized Limb Profile Products

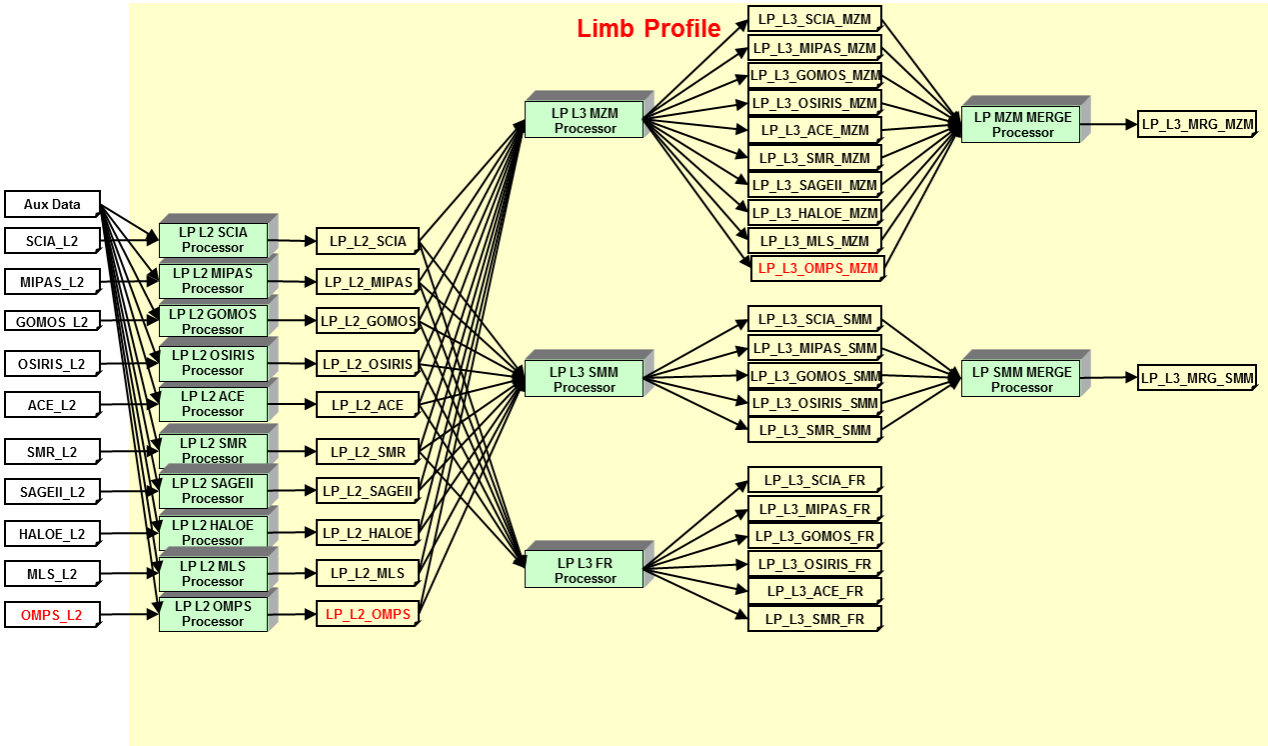

Figure 5-6 ECV Production Scenarios for harmonized MZM Limb Products

The production chain for the harmonized MZM Limb Ozone Profile is shown in **Error! Reference source not found.**. MLT L3 MIPAS Processor.

The system should be able to run the following processing steps:

- Generation of the harmonized 2 profiles (e.g. LP_GOMOs_L2, LP_MIPAS) using the sensor specific LP_L2 processor
  - Screening the original Level 2 profiles for invalid data
  - Interpolation to the HARMOZ pressure grid
  - Saving the data in the netcdf format (mandatory and optional parameters)
- Generation of the gridded and merged MZM L3 products
  - Creation of Level 3 data from each individual instrument (Monthly Zonal Mean and Semi-Monthly Mean data). Computing parameters and uncertainties associated with the Level 3 data
  - Creation of merged data based on individual L3 data (for MZM and SMM)
  - Creating netcdf files

5.1.3.2 Full Processing Scenario for the Generation of the MLT Products

Will be defined after the data generation.

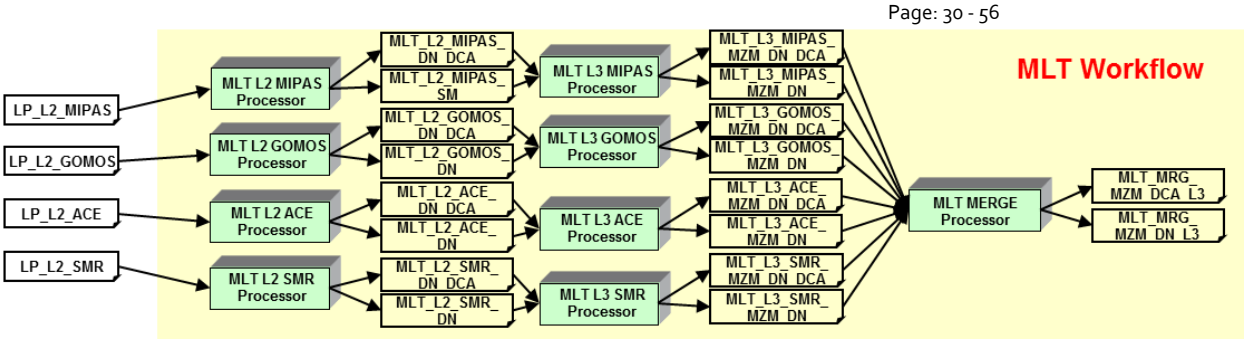

Figure 5-7 ECV Production Scenarios for MLT Limb Products

The production chain for the generation of the MLT Limb products is shown in Figure 5-7.

The system should be able to run the following processing steps:

- tbd

5.1.3.3 Full Processing Scenario for the Generation of the UTLS Products

Will be defined after the data generation

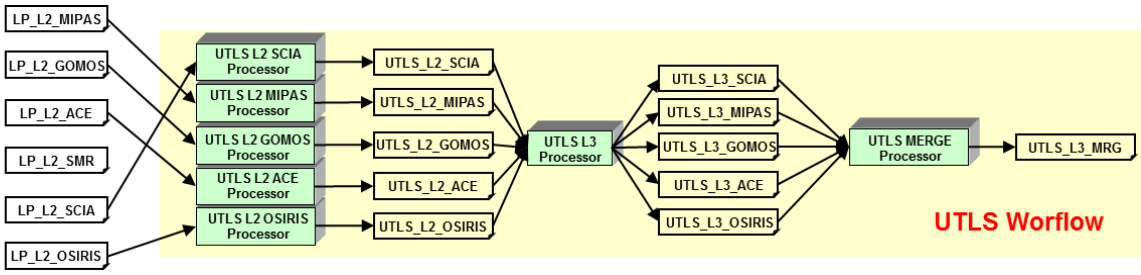

Figure 5-8 ECV Production Scenarios for UTLS Limb Products

The production chain for the generation of the UTLS Limb products is shown in Figure 5-8.

The system should be able to run the following processing steps:

- tbd

5.1.3.4 Full Processing Scenario for the Generation of the LNTOC Products

The system should be able to run the following processing steps:

- tbd

5.1.4 Online Access to Ozone ECV Products

The ECV products are provided by the FTP Server at BIRA. The products are uploaded according to Data Standards Requirements for CCI Data Producer ([AD3]) from the processing systems.

The users are then able to download the products directly from the FTP server. The products are provided on the server according to the directory path which is defined within the PSD ([AD5]). An overview about the directory paths and their content isl provided on the top level of the entry point.

6 Subsystem and Subsystem Components

This chapter describes the further subsystem and component decomposition including their functions, interfaces and interface items which are exchanged between them. The production workflows described in chapter 5.1 are handled via already existing processing facilities in different organizations. The online access is provided by a central ftp server at BIRA. The following chapters describe how the Ozone_cci system is composed of physical subsystems including their components. The different subsystems are the specific processing facilities of the involved organizations and the data services at BIRA. Components are the specific processors in order to execute the required algorithms which are necessary to generate the required products.

6.1 Processing Facilities for Nadir Ozone_cci Products

The following processing facilities are used for the generation of all required nadir Ozone_cci products:

- Processing Facility at BIRA
- Processing Facility at DLR
- Processing Facility at KLMI
- Processing Facility at RAL
- Processing Facility at ULB

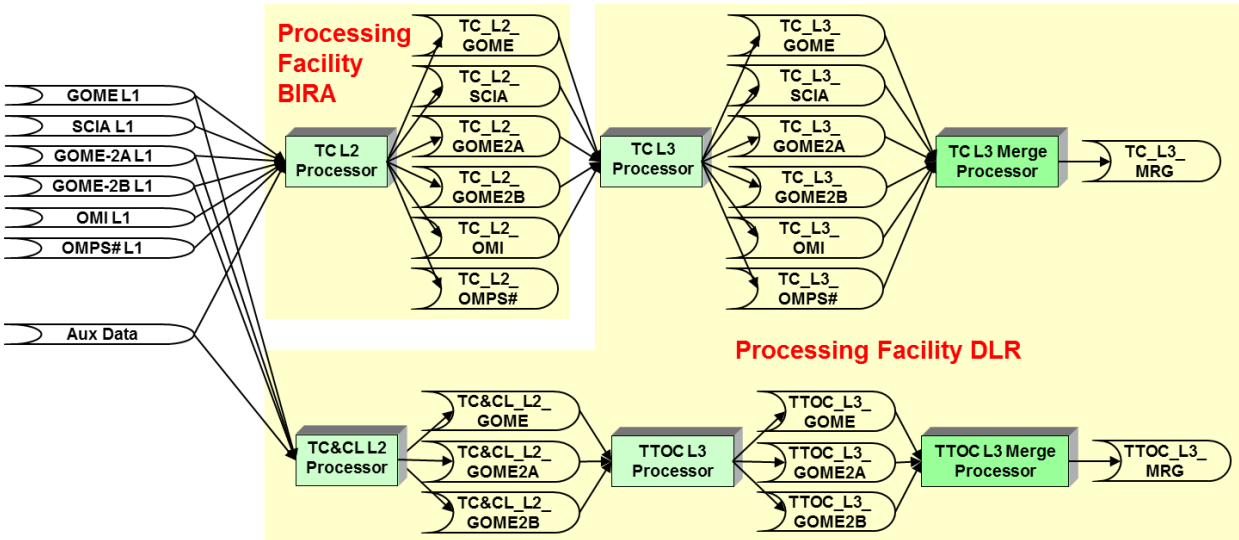

Figure 6-1 Processing Facilities for TC and TTOC

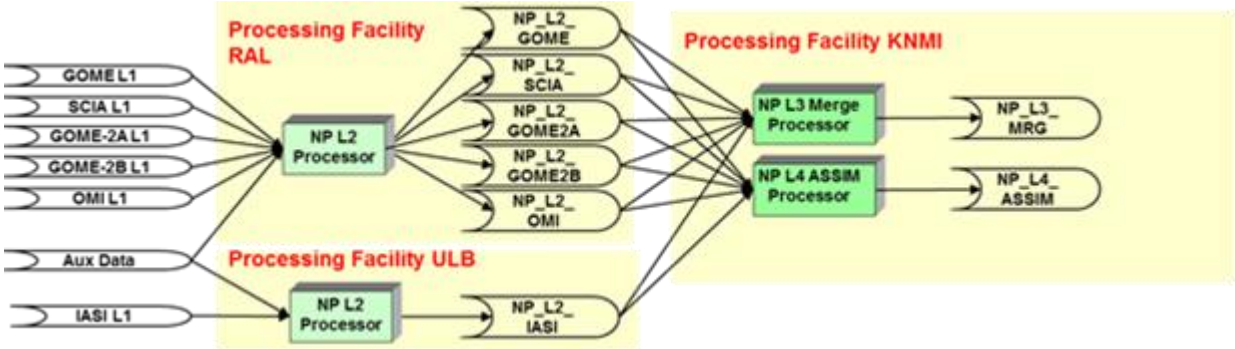

Figure 6-2 Processing Facilities for NP

6.1.1 Processing Facility at BIRA

6.1.1.1 Description

This processing facility provides the processors:

- TC L2 Processor

6.1.1.2 Processors

Title	TC L2 Processor
Name	GODFIT V3
Description	The processor ingests binary or HDF level 1 data (GOME, SCIAMACHY, GOME-2, OMI or OMPS) on orbit basis as well as required auxiliary data, and produces a level 2 O_3 total column product. The L2 processing is orbit oriented. One L1 orbit results in one L2 orbit product.
Used Algorithm	GODFIT V3

6.1.1.3 Functions

The processing facility provides the following functions for Phase 1 and 2:

- Generation of TC_L2_GOME products from GOME L1 products
- Generation of TC_L2_SCIA products from SCIA L1 products
- Generation of TC_L2_GOME2A products from GOME2A L1 products
- Transfer all generated and validated TC_L2 products to the FTP Server and/or the processing facility at DLR

The processing facility provides the following additional functions for Phase 2:

- Generation of TC_L2_GOME-2B products from GOME2B L1 products
- Generation of TC_L2_OMI products from OMI L1 products
- Generation of TC_L2_OMPS products from OMPS L1 products
- Transfer all generated and validated TC_L2 products to the FTP Server and/or the processing facility at DLR

6.1.1.4 Interfaces and Interface Items

Inputs

- L1_GOME original L1 GOME products
- L1_SCIA original L1 SCIA products
- L1_GOME2A original L1 GOME2A products
- L1_GOME2B original L1 GOME2B products
- L1_OMI original L1 OMI products
- L1_OMPS original L1 OMPS products
- Auxiliary Data
    - FRESCOv6 and/or OCRA/ROCINN cloud products for GOME, SCIAMACHY and GOME-2A and-2B
    - KNMI O_2-O_2 cloud product for OMI.
    - Coordinates product for OMI.
    - NASA cloud product for OMPS.

Outputs:

- TC_L2_GOME
- TC_L2_SCIA
- TC_L2_GOME2A
- TC_L2_GOME2B
- TC_L2_OMI
- TC_L2_OMPS

6.1.1.5 Hardware Environment

BIRA-IASB, where the TC L2 processor is located, is well equipped for the proposed tasks:

- Central file servers for scientific and operational datasets:
    - o 380 TB net capacity for datasets.
    - o All storage is configured for high availability.
    - o Part of the storage is configured in a cluster file system for high performance data processing.
- Linux cluster for data processing purposes (400+ x86 compatible computing cores).
- Central compute servers, shared with our Space-Pole partners KMI and KSB: Large, single system image CC-Numa compute server with 192 computing cores and 576 GB RAM. Vmware Vsphere 5 based cluster for virtual servers. Fully redundant configuration.
- State-of-the-art compilers (Fortran 90/95, C/C++, etc.), data analysis tools (IDL, MatLab, etc.), and general purpose software.

6.1.2 Processing Facility at DLR

6.1.2.1 Description

This processing facility provides the processors:

- TC L3 Processor
- TC L3 Merge Processor
- TC&CL L2 Processor
- TTOC L3 Processor
- TTOC L3 Merge Processor

6.1.2.2 Processors

Title	TC L3 Processor
Name	UCAS
Description	Level 3 processing: monthly regrid level 2 data, output to netCDF CF
Used Algorithm	existing Universal Climate processor for Atmospheric Spectrometers (UCAS)

Title	TC L3 Merge Processor
Name	UCAS
Description	ECV processing: monthly mean merge GOME, SCIAMACHY,GOME-2, OMI or optionally OMPS data, output to netCDF CF
Used Algorithm	existing Universal Climate processor for Atmospheric Spectrometers (UCAS)

Title	TC&CL L2 Processor

Name	UPAS
Description	Level 2 processing; ozone total column and cloud products.
Used Algorithm	existing Universal Processor for Atmospheric Spectrometers (UPAS)

Title	TTOC L3 Processor
Name	UPAS
Description	Level 3 processing: monthly regrid level 2 data, output to netCDF CF
Used Algorithm	existing Universal Processor for Atmospheric Spectrometers (UPAS)

Title	TTOC L3 Merge Processor
Name	UCAS
Description	ECV processing: monthly mean merge GOME, GOME-2A and GOME-2B, output to netCDF CF
Used Algorithm	existing Universal Climate processor for Atmospheric Spectrometers (UCAS)

6.1.2.3 Functions

The processing facility provides the following functions for Phase 1 and 2:

- Generation of TC_L3_GOME products from TC GOME L2 products
- Generation of TC_L3_SCIA products from TC SCIA L2 products
- Generation of TC_L3_GOME2A products from TC GOME2A L2 products
- Generation of TC_L3_GOME2B products from TC GOME2B L2 products
- Generation of TC_L3_MRG products from all generated TC L3 products
- Generation of TTOC_L3_MRG products from all generated TTOC L3 products
- Transfer all generated and validated TC_L3_MRG products to the FTP Server

The processing facility provides the following additional functions for Phase 2:

- Generation of TC_L3_OMI products from OMI L2 products
- Generation of TC_L3_OMPS products from OMPS L2 products
- Generation of TC_L3_MRG products from all generated TC L3 products by additional consideration of the OMI and OMPS L3 products
- Generation of TTOC_L3_GOME products
- Generation of TTOC_L3_GOME2A products
- Generation of TTOC_L3_GOME2B products
- Transfer all generated and validated TC_L3_MRG and the TTOC L3 products to the FTP Server

6.1.2.4 Interfaces and Interface Items

Inputs

- TC_L2_GOME Total Column L2 GOME products
- TC_L2_SCIA Total Column L2 SCIA products
- TC_L2_GOME2A Total Column L2 GOME2A products
- TC_L2_GOME2B Total Column L2 GOME2B products
- TC_L2_OMI Total Column L2 OMI products
- TC_L2_OMPS Total Column L2 OMPS products
- L1_GOME L1 GOME products

- L1 GOME-2 L1 GOME-2A and GOME-2B products

Outputs:

- TC_L3_MRG the merged ozone Total Column L3
- TTOC_L3_MRG the merged ozone Tropical Tropospheric Column L3

6.1.2.5 Hardware Environment

Cluster of Linux (SuSE) computers.

6.1.3 Processing Facility at RAL

6.1.3.1 Description

This processing facility provides the processors:

- NP L2 Processor

6.1.3.2 Processors

Title	NP L2 Processor
Name	RAL Ozone Profile Algorithm
Description	Ozone profiles are derived from nadir observations (Level 1b data) from GOME, SCIAMACHY, GOME-2 and OMI with an ozone profile Retrieval algorithm from RAL on an orbit basis. One L1 orbit results in one L2 orbit product.
Used Algorithm	RAL Ozone Profile Algorithm

6.1.3.3 Functions

The processing facility provides the following functions for Phase 1 and 2:

- Generation of NP_L2_GOME products from GOME L1 products
- Generation of NP_L2_SCIA products from SCIA L1 products
- Generation of NP_L2_GOME2A products from GOME2A L1 products
- Transfer all generated and validated NP_L2 products to the FTP Server

The processing facility provides the following additional functions for Phase 2:

- Generation of NP_L2_GOME2B products from GOME2B L1 products
- Generation of NP_L2_OMI products from OMI L1 products
- Transfer all generated and validated NP_L2 products to the FTP Server and/or the processing facility at KNMI

6.1.3.4 Interfaces and Interface Items

Inputs

- L1_GOME original L1 Gome products
- L1_SCIA original L1 SCIA products
- L1_GOME2A original L1 GOME2A products
- L1_GOME2B original L1 GOME2B products
- L1_OMI original L1 OMI products
- Auxiliary Data
    - ECMWF ERA Interim meteorological data
    - FRESCOv6 and/or OCRA/ROCINN cloud products for GOME, SCIAMACHY and GOME-2A and-2B

- Coordinates product for OMI.
- KNMI O2-O2 cloud product for OMI

Outputs:

- NP_L2_GOME Nadir Profile L2 GOME products
- NP_L2_SCIA Nadir Profile L2 SCIA products
- NP_L2_GOME2ANadir Profile L2 GOME2A products
- NP_L2_GOME2B Nadir Profile L2 GOME2B products
- NP_L2_OMI Nadir Profile L2 OMI products

6.1.3.5 Hardware Environment

The Nadir Profile L2 processing is performed on the JASMIN-CEMS facility located at the Rutherford Appleton Laboratory (RAL) in the UK.
JASMIN-CEMS provides a high-speed interface between a Panasas data repository (e.g. containing L1 and meteorological data) and the dedicated processing cluster, in addition to local temporary output product storage.

The processing is performed on 512 dedicated processing cores with frequent access to 3000 more when available. These processors mostly comprise Intel Xeon E5-2650 v2 "Ivy Bridge" (Viglen HX525T2i) each with 16 cores and either 128 or 512Mb memory.

6.1.4 Processing Facility at KNMI

6.1.4.1 Description

This processing facility provides the processors:

- NP L3 Merge Processor
- NP L4 ASSIM Processor

6.1.4.2 Processors

Title	NP L3 Merge Processor
Name	
Description	The nadir ozone profiles are homogenized into a level 3 product by regridding and interpolation and into a level 4 product by assimilation within the TM5 chemical-transport model. Merging will take place based on the level 2 data.
Used Algorithm	

Title	NP L4 ASSIM Processor
Name	
Description	The nadir ozone profiles are homogenized into a level 3 product by regridding and interpolation and into a level 4 product by assimilation within the TM5 chemical-transport model. Merging will take place based on the level 2 data.
Used Algorithm	

6.1.4.3 Functions

The processing facility provides the following functions for Phase 1and 2:

- Generation of NP_L3_MRG products from all NP L2 products

- Generation of NP_L4_ASSIM products from all NP L2 products
- Transfer all generated and validated NP_L3_MRG and the NP_L4_ASSIM products to the FTP Server

The processing facility provides the following additional functions for Phase 2:

- Generation of NP_L3_MRG products from all generated NP L2 products by additional consideration of the OMI and IASI L2 products
- Generation of NP_L4_ASSIM products from all generated NP L2 products by additional consideration of the OMI and IASI L2 products
- Transfer all generated and validated NP_L3_MRG and the NP_L4_ASSIM products to the FTP Server

6.1.4.4 Interfaces and Interface Items

Inputs

- NP_L2_GOME Nadir Profile L2 Gome products
- NP_L2_SCIA Nadir Profile L2 SCIA products
- NP_L2_GOME2A Nadir Profile L2 GOME2A products
- NP_L2_GOME2B Nadir Profile L2 GOME2B products
- NP_L2_OMI Nadir Profile L2 OMI products
- NP_L2_IASI Nadir Profile L2 IASI products

Outputs:

- NP_L3_MRG the merged Nadir Profile L3 products
- NP_L4_ASSIM the assimilated Nadir Profile L4 products

6.1.4.5 Hardware Environment

Special computing facilities consisting of blades and virtual blades on a central KNMI computing facilities

6.1.5 Processing Facility at ULB

6.1.5.1 Description

This processing facility provides the processors:

- NP L2 Processor

6.1.5.2 Processors

Title	NP L2 Processor
Name	FORLI-O3
Description	The processor ingests binary (BUFR) level 1 data (IASI) on PDU basis and produces a level 2 O3 nadir profile product.
Used Algorithm	FORLI-O3

6.1.5.3 Functions

The processing facility provides the following functions for Phase 2:

- Generation of NP_L2_IASI products from IASI L1 products
- Transfer all generated and validated NP_L2_IASI products to the FTP Server and/or the processing facility at KNMI

6.1.5.4 Interfaces and Interface Items

Inputs

- L1_IASI original L1 IASI products
- Auxiliary Data
    - IASI L2 meteorological data
    - FORLI look-up tables
    - orography/emissivity

Outputs:

- NP_L2_IASI

6.1.5.5 Hardware Environment

3 PC INTEL Servers each one includes:

- 8GB RAM
- 12TB storage (RAID-6)
- ARCH x86_64

2 NAS SYNOLOGY servers with a total of:

- -4GB RAM
- -46 TB storage (RAID-5)
- -DSM 4.3

1 LINUX CLUSTER including:

- Torque/Maui PBS scheduler
- 21(23) nodes totaling 344(354) threads, running ArchLinux x86_64

6.2 Processing Facilities for Limb Ozone_cci Products

The following processing facilities are used for the generation of all required nadir Ozone_cci products:

- Processing Facility at CHALM
- Processing Facility at FMI
- Processing Facility at KIT
- Processing Facility at UBR
- Processing Facility at UofT
- Processing Facility at UofS

6.2.1 Processing Facility at CHALM

6.2.1.1 Description

This processing facility provides the processors:

- LP L2 SMR Processor
- MLT L2 SMR Processor
- MLT L3 SMR Processor

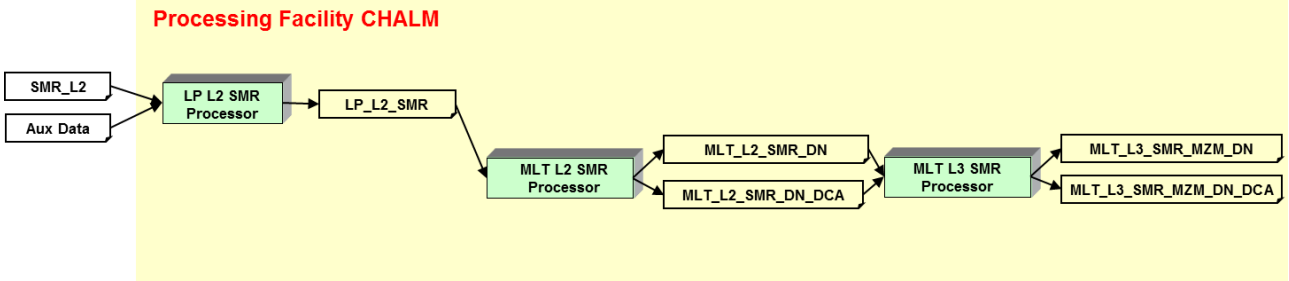

Figure 6-3 Processing Facility at CHALM

6.2.1.2 Processors

Title	LP L2 SMR Processor
Name	tbd
Description	tbd
Used Algorithm	tbd

Title	MLT L2 SMR Processor
Name	tbd
Description	tbd
Used Algorithm	tbd

Title	MLT L3 SMR Processor
Name	tbd
Description	tbd
Used Algorithm	tbd

6.2.1.3 Functions

The processing facility provides the following functions for Phase 2:

- Generation of harmonized LP_L2_SMR products
- Generation of the SMR L2 and L3 MLT products
- Transfer all generated and validated LP_L2 products and the L2 and L3 MLT products to the FTP Server and/or the processing facility at FMI and KIT

6.2.1.4 Interfaces and Interface Items

Inputs

- L1_SMR original L1 SMR products
- Auxiliary Data
  - ?

Outputs:

- LP_L2_SMR harmonized LP L2 products for SMR
- MLT_L2_SMR_DN L2 Mesosphere-Low Thermospheric Ozone products for SMR
- MLT_L2_SMR_DN_DCA_L2 tbd
- MLT_L3_SMR_MZM_DN_L3 tbd

MLT_L3_SMR_MZM_DN_DCA_L3 tbd

6.2.1.5 Hardware Environment

tbd

6.2.2 Processing Facility at FMI

6.2.2.1 Description

This processing facility provides the processors:

- LP L2 GOMOS HARMOZ Processor
- LP L3 MZM Processor
- LP MZM MERGE Processor
- LP L3 SMM Processor
- LP SMM MERGE Processor
- LP L3 FR Processor
- UTLS L2 GOMOS Processor
- UTLS L3 Processor
- UTLS MERGE Processor
- MLT L2 GOMOS Processor
- MLT L3 GOMOS Processor

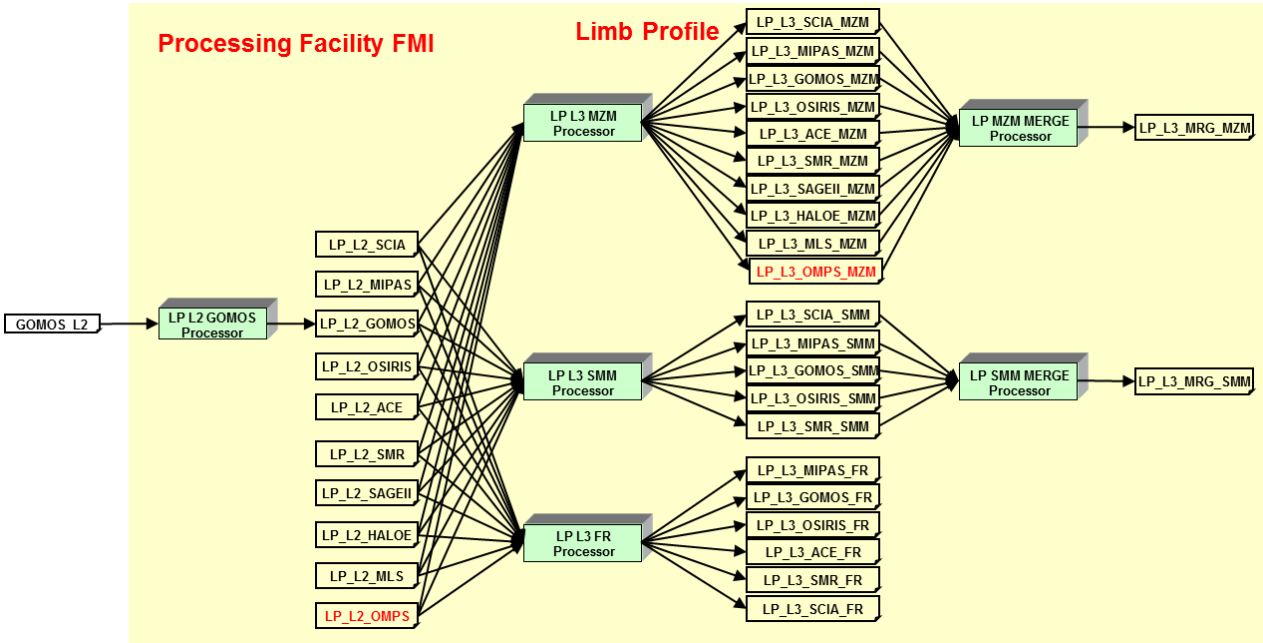

Figure 6-4 Processing Facility at FMI – MZM Workflow

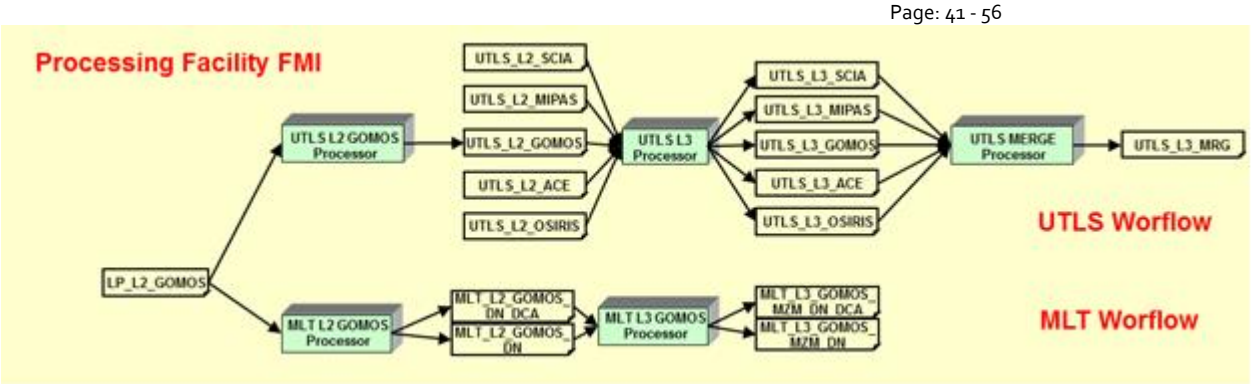

Figure 6-5 Processing Facility at FMI – MLT and UTLS Workflow

6.2.2.2 Processors

Title	LP L2 GOMOS Processor
Name	GOMOS HARMOZ
Description	Filtering the data and creation of GOMOS data in the HARMOZ format. The software is developed with Matlab.
Used Algorithm	Details of data screening is described in (Sofieva et al., 2013, ESSD)

Title	LP L3 Processor
Name	LP-MZM- HARMOZ
Description	Creating monthly zonal mean data for each instrument using the HARMOZ level 2 data. Evaluation of uncertainties associated with the L3 data
Used Algorithm	Computing mean values in the spatio-temporal bins. Details of the method for evaluation of uncertainties are presented in (Sofieva et al., 2014, AMT) and User Manual.

Title	LP MZM MERGE Processor
Name	LP-MMZM
Description	Creation of merged monthly zonal mean data using the MZM data from individual instruments. Evaluation of associated uncertainties.
Used Algorithm	Merging is performed by computing weighted mean data according to the total uncertainties. The details are in the User Manual.

Title	LP L3 SMM Processor
Name	LP-L3SMM
Description	Creating semi-monthly mean ozone profiles in 10°x20° latitude-longitude bins for each sensor. Evaluation of associated uncertainties.
Used Algorithm	The details are in User manual

Title	LP SMM MERGE Processor
Name	LP-MSMM
Description	Creating semi-monthly mean ozone profiles in 10°x20° latitude-longitude bins. Evaluation of associated uncertainties.
Used Algorithm	The averaging and merging is analogous to creation of the merged monthly zonal mean data. The details are in User manual

Title	LP L3 FR Processor
Name	LP-FR

Description	Creating Level 3 fine-resolution datasets for each individual sensor. Evaluation of associated uncertainties.
Used Algorithm	Data are averaged in fine spatio-temporal bins. The details are in User manual

Title	UTLS L2 GOMOS Processor
Name	UTLS-GOMLAB
Description	The alternative GOMOS Level 2 scientific processor developed at FMI.
Used Algorithm	Two-step GOMOS inversion with optimization in the UTLS.

Title	UTLS L3 Processor
Name	LP-UTLS-L3
Description	Creating the Level 3 UTLS data sets for each individual sensor. Averaging the data in the spatio-temporal bins.
Used Algorithm	

Title	UTLS MERGE Processor
Name	
Description	
Used Algorithm	

Title	MLT L2 GOMOS Processor
Name	MLT-GOMOS-L2
Description	Creation of Level 2 monthly zonal mean data in the UTLS.
Used Algorithm	

Title	MLT L3 GOMOS Processor
Name	MLT-GOMOS-L3
Description	Creation of Level 3 monthly zonal mean data in the UTLS.
Used Algorithm	

6.2.2.3 Functions

The processing facility provides the following functions for Phase 1 and 2:

- Generation of harmonized LP_L2_GOMOS products
- Generation of the LP_L3 products for all sensors
- Generation of LP_L3_MZM_MRG products from all generated LP L3 products
- Generation of LP_L3_SMM products for all sensors from the harmonized LP L2 products
- Generation of LP_L3_MRG_SMM products for all generated LP L3 SMM products
- Generation of LP_L3_FR products for all sensors from the harmonized LP-L2 products
- Transfer all generated and validated LP_L3, LP_L3_MRG_MZM, LP_L3_SMM, LP_L3_MRG_SMM and LP_L3_FR products to the FTP Server

The processing facility provides the additional functions for Phase 2:

- Generation of UTLS_L2_GOMOS products
- Generation of MLT_L2 and MLT_L3 products for GOMOS
- Generation of the UTLS_L3 products for all sensors
- Generation of UTLS_L3_MRG products from all generated LP L3 products
- Transfer all generated and validated UTLS_L3 and UTLS_L3_MRG products to the FTP Server

- Transfer all generated and validated MLT_L2 and MLT_L3 products for GOMOS to the FTP server and/or to KIT.

6.2.2.4 Interfaces and Interface Items

Inputs

- GOMOS_L2 original L2 GOMOS products
- Auxiliary Data
  - ?
- LP_L2_SCIA harmonized Limb Profile L2 products for SCIAMACHY
- LP_L2_OMPS harmonized Limb Profile L2 products for OMPS
- LP_L2_MIPAS harmonized Limb Profile L2 products for MIPAS
- LP_L2_OSIRIS harmonized Limb Profile L2 products for OSIRIS
- LP_L2_SMR harmonized Limb Profile L2 products for SMR
- LP_L2_ACE harmonized Limb Profile L2 products for ACE
- LP_L2_SAGEII harmonized Limb Profile L2 products for SAGEII
- LP_L2_HALOE harmonized Limb Profile L2 products for HALOE
- LP_L2_MLS harmonized Limb Profile L2 products for MLS
- UTLS_L2_SCIA Upper Troposphere - Lower Stratosphere L2 products for SCIAMACHY
- UTLS_L2_MIPAS Upper Troposphere - Lower Stratosphere L2 products for MIPAS
- UTLS_L2_GOMOS Upper Troposphere - Lower Stratosphere L2 products for GOMOS
- UTLS_L2_OSIRIS Upper Troposphere - Lower Stratosphere L2 products for OSIRIS
- UTLS_L2_ACE Upper Troposphere - Lower Stratosphere L2 products for ACE

Outputs:

- LP_L2_GOMOS harmonized Limb Profile L2 products for GOMOS
- LP_L3_SCIA_MZM gridded Limb Profile L3 products for SCIAMACHY
- LP_L3_OMPS_MZM gridded Limb Profile L3 products for OMPS
- LP_L3_MIPAS_MZM gridded Limb Profile L3 products for MIPAS
- LP_L3_GOMOS_MZM gridded Limb Profile L3 products for GOMOS
- LP_L3_OSIRIS_MZM gridded Limb Profile L3 products for OSIRIS
- LP_L3_SMR_MZM gridded Limb Profile L3 products for SMR
- LP_L3_ACE_MZM gridded Limb Profile L3 products for ACE
- LP_L3_SAGEII_MZM gridded Limb Profile L3 products for SAGEII
- LP_L3_HALOE_MZM gridded Limb Profile L3 products for HALOE
- LP_L3_MLS_MZM gridded Limb Profile L3 products for MLS
- LP_L3_MRG_MZM merged Limb Profile products on monthly mean
- LP_L3_SMM semimonthly-mean Limb Profile L3 products (resolved longitudinal structure), for individual instruments
- LP_L3_MRG_SMM merged semimonthly-mean Limb Profile L3 products (resolved longitudinal structure)
- LP_L3_MIPAS_FR fine-resolution L3 Limb Profile products for MIPAS

- LP_L3_GOMOS_FR fine-resolution L3 Limb Profile products for GOMOS
- LP_L3_OSIRIS_FR fine-resolution L3 Limb Profile products for OSIRIS
- LP_L3_ACE_FR fine-resolution L3 Limb Profile products for ACE
- LP_L3_SMR_FR fine-resolution L3 Limb Profile products for SMR
- LP_L3_SCIA_FR fine-resolution L3 Limb Profile products for SCIA
- UTLS_L3_SCIA Upper Troposphere - Lower Stratosphere L3 products for SCIAMACHY
- UTLS_L3_MIPAS Upper Troposphere - Lower Stratosphere L3 products for MIPAS
- UTLS_L3_GOMOS Upper Troposphere - Lower Stratosphere L3 products for GOMOS
- UTLS_L3_OSIRIS Upper Troposphere - Lower Stratosphere L3 products for OSIRIS
- UTLS_L3_ACE Upper Troposphere - Lower Stratosphere L3 products for ACE
- UTLS_L3_MRG merged Upper Troposphere - Lower Stratosphere L3 products
- MLT_L2_GOMOS_DN L2 Mesosphere-Low Thermospheric Ozone products for GOMOS
- MLT_L2_SMR_DN_DCA
- MLT_L3_SMR_MZM_DN
- MLT_L3_SMR_MZM_DN_DCA

6.2.2.5 Hardware Environment

Desktop computers, data storage

6.2.3 Processing Facility at KIT

6.2.3.1 Description

This processing facility provides the processors:

- LP L2 MIPAS Processor
- MLT L2 MIPAS Processor
- MLT L3 MIPAS Processor

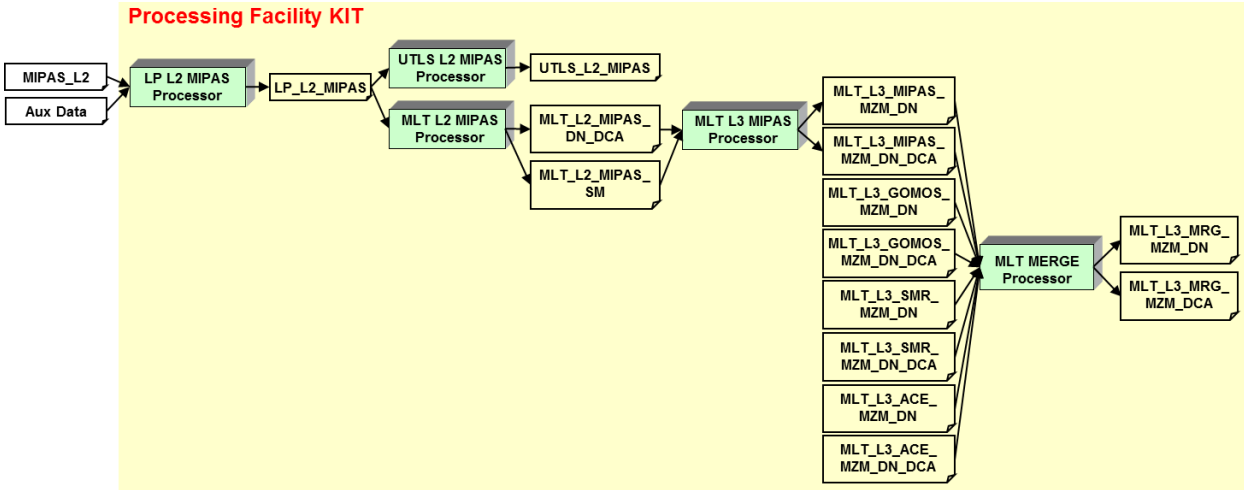

Figure 6-6 Processing Facility at KIT

6.2.3.2 Processors

Title	LP L2 MIPAS Processor
Name	MIPAS IMK/IAA Scientific Level 2 Processor
Description	This processor ingests level 1 ozone Spectra of MIPAS produced by ESA and produces out of it
Used Algorithm	IMK/IAA Scientific + KOPRA/RCP

Title	UTLS L2 MIPAS Processor
Name	MIPAS IMK/IAA Scientific Level 2 Processor
Description	This processor ingests level 1 ozone Spectra of MIPAS produced by ESA and produces out of it
Used Algorithm	IMK/IAA Scientific + KOPRA/RCP

Title	MLT L2 MIPAS Processor
Name	MIPAS IMK/IAA Scientific Level 2 Processor
Description	This processor ingests level 1 ozone Spectra of MIPAS produced by ESA and produces out of it
Used Algorithm	IMK/IAA Scientific + KOPRA/RCP

Title	MLT L3 MIPAS Processor
Name	tbd
Description	tbd
Used Algorithm	tbd

Title	MLT L3 MERGE Processor
Name	tbd
Description	tbd
Used Algorithm	tbd

6.2.3.3 Functions

The processing facility provides the following functions for Phase 1 and 2:

- Generation of harmonized LP_L2_MIPAS products
- Generation of the MIPAS L2 and L3 MLT products

- Merging of the L3 MLT products
- Transfer all generated and validated LP_L2 products to the FTP Server and/or the processing facility at FMI
- Transfer all generated and validated MIPAS L2 and L3 MLT products to the FTP Server
- Transfer all generated and validated merged MLT products to the FTP Server

The processing facility provides the following additional functions for Phase 2:

- Generation of the MIPAS L2 and L3 MLT products
- Merging of the L3 MLT products
- Transfer all generated and validated MIPAS L2 and L3 MLT products to the FTP Server
- Transfer all generated and validated merged MLT products to the FTP Server

6.2.3.4 Interfaces and Interface Items

Inputs

- MIPAS_L2 original L2 MIPAS products
- Auxiliary Data
  - ECMWF data analysis
- MLT_L3_GOMOS_MZM_DN L3 Mesosphere-Low Thermospheric Ozone products for GOMOS
- MLT_L3_GOMOS_MZM_DN_DCA
- MLT_L3_SMR_MZM_DN L3 Mesosphere-Low Thermospheric Ozone products for SMR
- MLT_L3_SMR_MZM_DN_DCA
- MLT_L3_ACE_MZM_DN L3 Mesosphere-Low Thermospheric Ozone products for ACE
- MLT_L3_ACE_MZM_DN_DCA

Outputs:

- LP_L2_MIPAS harmonized Limb Profile L2 products for MIPAS
- UTLS_L2_MIPAS Upper Troposphere - Lower Stratosphere L2 products for MIPAS
- MLT_L2_MIPAS_DN L2 Mesosphere-Low Thermospheric Ozone products for MIPAS
- MLT_L2_MIPAS_DN_DCA
- MLT_L3_MIPAS_MZM_DN
- MLT_L3_MIPAS_MZM_DN_DCA
- MLT_L3_MRG_MZM_DN
- MLT_L3_MRG_MZM_DN

6.2.3.5 Hardware Environment

tbd

6.2.4 Processing Facility at UBR

6.2.4.1 Description

This processing facility provides the processors:

- LP L2 SCIA Processor
- LP L2 OMPS Processor
- LP L2 SAGEII Processor
- LP L2 HALOE Processor
- LP L2 MLS Processor
- UTLS L2 SCIA Processor
- LNTOC SCIA Processor
- LNTOC OMPS Processor

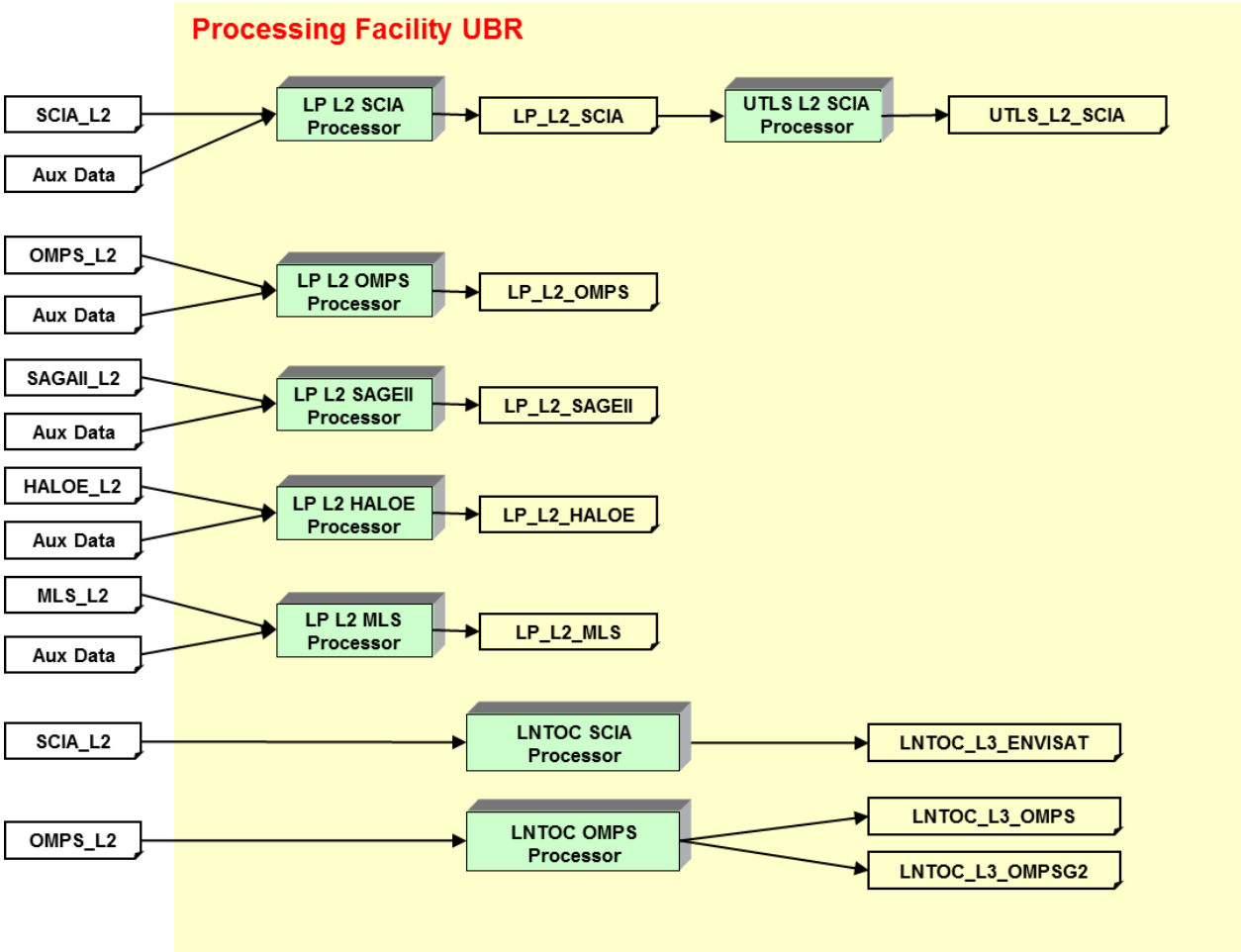

Figure 6-7 Processing Facility at UBR

6.2.4.2 Processors

Title	LP L2 SCIA Processor
Name	SCIAMACHY HARMOZ
Description	Filtering of SCIAMACHY ozone profiles, interpolation on the CCI grid and data production (See HARMOZ.pdf)
Used Algorithm	esacci_harmoz.pro processed with the IDL software

Title	LP L2 OMPS Processor
Name	*Not available yet*
Description	*Not available yet*
Used Algorithm	*Not available yet*

Title	LP L2 SAGEII Processor
Name	*Not available yet*
Description	*Not available yet*
Used Algorithm	*Not available yet*

Title	LP L2 HALOE Processor
Name	*Not available yet*
Description	*Not available yet*
Used Algorithm	*Not available yet*

Title	LP L2 MLS Processor
Name	HARMOZ MLS
Description	Processing, regridding and interpolation of MLS ozone profiles on CCI-grid. Filtering and screening of bad data are performed. GPHor native geometrical altitude grid of MLS information is replaced by interpolated ECMWF altitude grid.
Used Algorithm	harmoz_mls_v02.pro processed with IDL software

Title	LNTOC SCIA Processor
Name	LNTOC_CODE_4
Description	Available software developed by F.Ebojie. Performance in speed optimization and adjustment of NetCDF output for CCI.
Used Algorithm	CODE_4_LIMB_NADIR_MATCH.pro processed with IDL software

Title	LNTOC OMPS Processor
Name	*Not available yet*
Description	*Not available yet*
Used Algorithm	*Not available yet*

6.2.4.3 Functions

The processing facility provides the following functions for Phase 1 and 2:

- Generation of harmonized LP_L2_SCIAMACHY products
- Transfer all generated and validated LP_L2 products for SCIAMACHY to the FTP Server and/or to the processing facility at FMI

The processing facility provides the additional functions for Phase 2:

- Generation of harmonized LP_L2_OMPS products
- Generation of harmonized LP_L2_SAGEII products
- Generation of harmonized LP_L2_HALOE products
- Generation of harmonized LP_L2_MLS products
- Generation of the LNTOC products for SCIA.
- Generation of the LNTOC products for OMPS.
- Transfer all generated and validated LP_L2 products for OMPS, SAGEII, HALOE and MLS to the FTP Server and/or to the processing facility at FMI

- Transfer all generated and validated LNTOC products for SCIA and OMPS to the FTP Server

6.2.4.4 Interfaces and Interface Items

Inputs

- SCIA_L2 original L2 SCIAMACHY products
- OMPS_L2 original L2 OMPS products
- SAGE II_L2 original L2 SAGE II products
- HALOE_L2 original L2 HALOE products
- MLS_L2 original L2 MLS products
- SCIA_L2 original L2 SCIAMACHY products
- Auxiliary Data
    - ECMWF data: Pressure, temperature and altitude

Outputs:

- LP_L2_SCIA harmonized Limb Profile L2 products for SCIAMACHY
- LP_L2_OMPS harmonized Limb Profile L2 products for OMPS
- LP_L2_SAGEII harmonized Limb Profile L2 products for SAGEII
- LP_L2_HALOE harmonized Limb Profile L2 products for HALOE
- LP_L2_MLS harmonized Limb Profile L2 products for MLS
- LNTOC_L3_ENVISAT tbd
- LNTOC_L3_OMPS tbd
- LNTOC_L3_OMPSG2 tbd

6.2.4.5 Hardware Environment

Local computer and cluster grid engine.

6.2.5 Processing Facility at UofT

6.2.5.1 Description

This processing facility provides the processors:

- LP L2 ACE Processor
- UTLS L2 ACE Processor
- MLT L2 ACE Processor
- MLT L3 ACE Processor

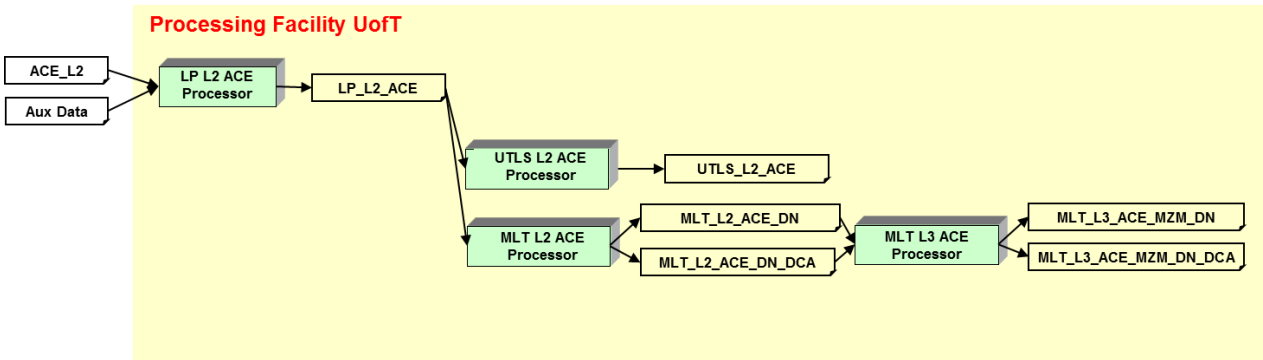

Figure 6-8 Processing Facility at UofT

6.2.5.2 Processors

Title	LP L2 ACE Processor
Name	tbd
Description	tbd
Used Algorithm	tbd

Title	UTLS L2 ACE Processor
Name	tbd
Description	tbd
Used Algorithm	tbd

Title	MLT L2 ACE Processor
Name	tbd
Description	tbd
Used Algorithm	tbd

Title	MLT L3 ACE Processor
Name	tbd
Description	tbd
Used Algorithm	tbd

6.2.5.3 Functions

The processing facility provides the following functions for Phase 2:

- Generation of harmonized LP_L2_ACE products
- Generation of the UTLS L2 products for ACE
- Generation of the ACE L2 and L3 MLT products
- Transfer all generated and validated LP_L2 products, UTLS L2 products and the L2 and L3 MLT products for ACE to the FTP Server and/or the processing facility at FMI and KIT

6.2.5.4 Interfaces and Interface Items

Inputs

- ACE_L2 original L2 ACE products
- Auxiliary Data
  - ?

Outputs:

- LP_L2_ACE harmonized LP L2 products for ACE
- UTLS_L2_ACE Upper Troposphere - Lower Stratosphere L2 products for ACE
- MLT_L2_ACE_DN L2 Mesosphere-Low Thermospheric Ozone products for SMR
- MLT_L2_ACE_DN_DCA_L2 tbd
- MLT_L3_ACE_MZM_DN_L3 tbd
- MLT_L3_ACE_MZM_DN_DCA_L3 tbd

6.2.5.5 Hardware Environment

tbd

6.2.6 Processing Facility at UofS

6.2.6.1 Description

This processing facility provides the processors:

- LP L2 OSIRIS Processor
- UTLS L2 OSIRIS Processor

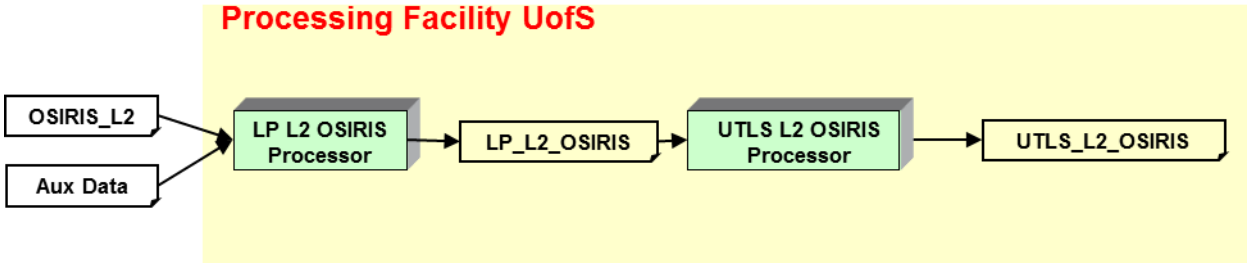

Figure 6-9 Processing Facility at UofS

6.2.6.2 Processors

Title	LP L2 OSIRIS Processor
Name	SaskMART 5.07
Description	The processor ingests binary level 1 data (OSIRIS) on orbit basis and produces a level 2 O3 limb profile product.
Used Algorithm	SaskMART, SASKTRAN

Title	UTLS L2 OSIRIS Processor
Name	SaskMART 5.07
Description	The processor ingests binary level 1 data (OSIRIS) on orbit basis and produces a level 2 O3 UTLS product.
Used Algorithm	SaskMART, SASKTRAN

6.2.6.3 Functions

The processing facility provides the following functions for Phase 2:

- Generation of harmonized LP_L2_OSIRIS products
- Generation of the UTLS L2 products for OSIRIS
- Transfer all generated and validated LP_L2 products and UTLS L2 products for OSIRIS to the FTP Server and/or the processing facility at FMI

6.2.6.4 Interfaces and Interface Items

Inputs

- OSIRIS_L2 original L2 OSIRIS products
- Auxiliary Data
  - None

Outputs:

- LP_L2_OSIRIS harmonized LP L2 products for OSIRIS

- UTLS_L2_OSIRIS Upper Troposphere - Lower Stratosphere L2 products for OSIRIS

6.2.6.5 Hardware Environment

Special computing facilities consisting of servers at the University of Saskatchewan.

6.3 Data Handling Domain

6.3.1 Online Access via FTP Server (OA)

6.3.1.1 Description

This processing facility provides the processors:

- LP L2 ACE Processor
- UTLS L2 ACE Processor
- MLT L2 ACE Processor
- MLT L3 ACE Processor

6.3.1.2 Functions

The ftp server at BIRA is used for the following functions:

- listing of all available Ozone_cci products
- provision of all output products from the Ozone_cci project. The simple open public ftp archive makes all output products accessible all time.

6.3.1.3 Hardware Environment

tbc

6.4 Management Domain

6.4.1 Production Management (PM)

The Production Management is an organizational component and has to be done on each processing facility. It is responsible to fulfil the following functions:

- Organization, monitoring and control of all operational production processes. This includes the production of new data as well as the production of reprocessing procedures.
- Organization, monitoring and control of all operational quality control processes.
  A quality control process may be a complete QA processing of a processed data set which must be executed independently from the L2, L3 or ECV merge processing.
  A QA process can also be a final subsequent processing step of the operational processing. A subsequent QA control process detects then only these products which are annotated with bad quality.
- Organization, monitoring and control of all operational product procurement processes. This includes the procurement of all needed input data. Detection and elimination of production errors. Maintenance and update of the Ozone_cci components and system according to the common development of the used COTS and the approved pre-operational algorithm versions and Ozone_cci component deliveries.
- Maintenance of the resources of the Ozone_cci system regarding needed disk space, archive space, available processing nodes, available processing systems

- Monitoring of the Ozone_cci system.
  This includes the monitoring of logfiles as well the listing of all available Ozone_cci products
- provision of all output products from the Ozone_cci project. The simple open public ftp archive makes all output products accessible all time.

6.4.2 Algorithm/Processor Development Management (AM)

The Algorithm/Processor Development Management is an organizational component. It is responsible to fulfil the following functions:

- Definition of algorithm development priorities
  Definition of algorithm/processor development priorities in order to control the operational product evolution.
  This task has to be coordinated in interaction with the Climate Research Group (CRG) and the CCI Climate Modelling Group (CRG), the relevant science users, relevant instrument teams and relevant space agencies.
- Definition of new requirements
  Collection and definition of new requirements for the development and improvement of the algorithms
- Coordination of algorithm development
  Coordination of the algorithm development, according to the new requirements. This includes the organisation of all necessary steps which ensure well defined version controlled algorithm deliveries.
- Integration of new algorithm versions
  Integration of new algorithm versions into the operational system within a pre-operational instance
- Triggering of validation procedure
  Assurance of scientific quality of the ECV products triggering a subsequent verification and validation process of the pre-operational instance.
- This validation process is handled by the Validation

7 Data Flow for ECV Production

7.1 Phase 1

The following table gives an overview about the data flow required for the production of the 3 ECVs. The amount of L2, L3 and ECV data is derived from the input data specified within the DARD reduced by predefined scaling factors for the several processing steps.

Input Products Total Column				**Intermediate Products L2**				**Intermediate Products L3**				**ECV Products**				
	Gbyte	Gbyte/y	Cover. Years	Factor L1/L2	Gbyte	Gbyte/y	Cover. Years	Factor L1/L3	Gbyte	Gbyte/y	Cover. Years	Factor L1/ECV	Gbyte	Gbyte/y	Cover. Years	
GOME L1	1000	63	16	14	70	4	16	500	2	0,13	16	1000	1	0,06	16	
SCIA L1	16000	1778	9	160	100	11	9	16000	1	0,11	9	16000	1	0,11	9	
GOME-2 L1	15000	3750	4	150	100	25	4	15000	1	0,25	4	15000	1	0,25	4	
Total	**32000**	**5590**			**270**	**40**			**4**	**0,49**			**3**	**0,42**		**37908**

Input Products Nadir Profile				**Intermediate Products L2**				**ECV Products L3**				**ECV Products L4**				
	Gbyte	Gbyte/y	Cover. Years	Factor L1/L2	Gbyte	Gbyte/y	Cover. Years	Factor L1/L3-ECV	Gbyte	Gbyte/y	Cover. Years	Factor L1/L4 ECV	Gbyte	Gbyte/y	Cover. Years	
GOME L1	1000	63	16	1	1000	63	16	5	200	13	16	5	200	12,50	16	
SCIA L1	16000	1778	9	5	3200	356	9	10	1600	178	9	10	1600	177,78	9	
GOME-2 L1	15000	3750	4	10	1500	375	4	100	150	38	4	100	150	37,50	4	
OMI	15000	2143	7	10	1500	214	7	100	150	21	7	100	150	21,43	7	
Total	**47000**	**7733**			**7200**	**1007**			**2100**	**249**			**2100**	**249**		**67390**

Input Products Limb Profile				**Intermediate/Input Products L2**				**ECV Products**								
	Gbyte	Gbyte/y	Cover. Years	Factor L1/L2	Gbyte	Gbyte/y	Cover. Years	Factor L1/L3-ECV	Gbyte	Gbyte/y	Cover. Years					
SCIA L1	16000	1778	9	5	3200	356	9	5	3200	356	9					
MIPAS L1	7000	778	9	10	700	78	9	10	700	78	9					
GOMOS L1	10000	1111	9	10	500	56	9	10	1000	111	9					
Total	**33000**	**3667**			**4400**	**489**			**4900**	**544**						**47000**

Table 7-1 Data Flow Phase 1

7.2 Phase 2

The following tables give an overview about the data flow required for the production in phase 2. The amount of L2, L3 and ECV data is derived from the input data specified within the DARD reduced by predefined scaling factors for the several processing steps.

Input Products Total Column				**Intermediate Products L2**				**Intermediate Products L3**				**ECV Merged and TTOC Products**			
	Gbyte	Gbyte/y	Cover. Years	Factor L1/L2	Gbyte	Gbyte/y	Cover. Years	Factor L1/L3	Gbyte	Gbyte/y	Cover. Years	Factor L1/ECV	Gbyte	Gbyte/y	Cover. Years
GOME L1	720	45	16	42	17	1	16	500	1	0,09	16	1000	1	0,05	16
SCIA L1	17408	1451	12	470	37	3	12	16000	1	0,12	9	16000	1	0,12	9
GOME-2A L1	55000	5500	10	550	100	10	10	15000	4	0,92	4	15000	4	0,92	4
GOME-2B L1	22000	5500	4	550	40	10	4	15000	1	0,37	4	15000	1	0,37	4
OMI L1	11310	870	13	8	1432	110	13	tbd	tbd	tbd	tbd	tbd	tbd	tbd	tbd
OMPS L1	1850	370	5	31	60	12	5	tbd	tbd	tbd	tbd	tbd	tbd	tbd	tbd
Total	**108288**	**13736**			**1686**	**146**			**8**	**1,49**			**7**	**1,45**	

Input Products Nadir Profile				Intermediate Products L2				ECV Products L3				ECV Products L4			
	Gbyte	Gbyte/y	Cover. Years	Factor L1/L2	Gbyte	Gbyte/y	Cover. Years	Factor L1/L3-ECV	Gbyte	Gbyte/y	Cover. Years	Factor L1/L4 ECV	Gbyte	Gbyte/y	Cover. Years
GOME L1	1280	80	16,0	1,0	1280	80	16,0	350	4	0	16	5	256	16,00	16
SCIA L1	18468	2052	9,0	5,0	3694	410	9,0	12000	2	0	9	130	142	15,78	9
GOME-2 L1	12480	3120	4,0	10,0	1248	312	4,0	18000	1	0	4	200	62	15,60	4
OMI L1	13608	1944	7,0	10,0	1361	194	7,0	11500	1	0	7	120	113	16,20	7
IASI L1	51000	6800	7,5	4,5	11333	1511	7,5	tbd	tbd	tbd	tbd	tbd	tbd	tbd	tbd
Total	**96836**	**13996**			**18916**	**2508**			**7**	**1**			**574**	**64**	

Table 7-2 Data Flow for Total Colums and Nadir Profile products in Phase 2

Input Products Limb Profile				**Harmonized LP L2 Products**				**LP L3 Products**				**ECV LP MZM/SMM/FR Merged Products**			
	Gbyte	Gbyte/y	Cover. Years	Factor L2/Har.L2	Gbyte	Gbyte/y	Cover. Years	Factor L2/L3-ECV	Gbyte	Gbyte/y	Cover. Years	Factor L3/L3-ECV	Gbyte	Gbyte/y	Cover. Years
SCIA L2	27,0000	2,8421	9,5	7	4,0909	0,4306	9,5	5	0,8182	0,0861	9,5	5	0,1636	0,0172	9,5
MIPAS L2		0,0000	10,0	1	0,0000	0,0000	10,0	157	0,0000	0,0000	10,0	10	0,0000	0,0000	10,0
GOMOS L2	0,4590	0,0459	10,0	1	0,4590	0,0459	10,0	157	0,0029	0,0003	10,0	10	0,0003	0,0000	10,0
OSIRIS L2	5,5000	0,4231	13,0	1	5,5000	0,4231	13,0	157	0,0351	0,0035	10,0	10	0,0035	0,0004	10,0
ACE L2		0,0000	10,0	1	0,0000	0,0000	10,0	157	0,0000	0,0000	10,0	10	0,0000	0,0000	10,0
SMR L2		0,0000	10,0	1	0,0000	0,0000	10,0	157	0,0000	0,0000	10,0	10	0,0000	0,0000	10,0
SAGEII L2		0,0000	10,0	1	0,0000	0,0000	10,0	157	0,0000	0,0000	10,0	10	0,0000	0,0000	10,0
HALOE L2		0,0000	10,0	1	0,0000	0,0000	10,0	157	0,0000	0,0000	10,0	10	0,0000	0,0000	10,0
MLS L2	29,0000	3,6250	8,0	1	29,0000	3,6250	8,0	5	5,8000	0,7250	8,0	5	1,1600	0,1450	8,0
OMPS		0,0000	10,0	1	0,0000	0,0000	10,0	157	0,0000	0,0000	10,0	10	0,0000	0,0000	10,0
Total	**61,9590**	**6,9361**			**39,0499**	**4,5246**		157	**6,6562**	**0,8149**	10,0	10	1,3274	0,1626	10,0

Input Products UTLS				**UTLS L2 Products**				**UTLS L3 Products**				**UTLS Merged Products**			
Harmonized LP L	**Gbyte**	Gbyte/y	Cover. Years	Factor Har.L2/UTLS L2	Gbyte	Gbyte/y	Cover. Years	Factor UTLS L2/L3	Gbyte	Gbyte/y	Cover. Years	Factor UTLS L3/L3-MRG	Gbyte	Gbyte/y	Cover. Years
LP_L2_SCIA	4,0909	0,4545	9,0	1	4,0909	0,4545	9,0	1	4,0909	0,4545	9,0	tbd	tbd	tbd	9,0
LP_L2_MIPAS	0,0000	0,0000	9,0	1	0,0000	0,0000	9,0	1	0,0000	0,0000	9,0	tbd	tbd	tbd	9,0
LP_L2_GOMOS	0,4590	0,0510	9,0	1	0,4590	0,0510	9,0	1	0,4590	0,0510	9,0	tbd	tbd	tbd	9,0
LP_L2_OSIRIS	5,5000	0,4231	13,0	1	5,5000	0,4231	13,0	1	5,5000	0,4231	13,0	tbd	tbd	tbd	
LP_L2_ACE	tbd	tbd	tbd	tbd	tbd	tbd	tbd	tbd	tbd	tbd	tbd	tbd	tbd	tbd	tbd
Total	**10,0499**	**0,9286**			**10,0499**	**0,9286**			**10,0499**	**0,9286**			**0,0000**	**0,0000**	

Input Products MLT				**MLT L2 Products**				**MLT L3 Products**				**MLT Merged Products**			
Harmonized LP L	**Gbyte**	Gbyte/y	Cover. Years	Factor Har.L2/MLT L2	Gbyte	Gbyte/y	Cover. Years	Factor MLT L2/L3	Gbyte	Gbyte/y	Cover. Years	Factor MLT L3/L3-MRG	Gbyte	Gbyte/y	Cover. Years
LP_L2_MIPAS	0,0000	0,0000	10,0	tbd	tbd	tbd	tbd	tbd	tbd	tbd	tbd	tbd	tbd	tbd	tbd
LP_L2_GOMOS	0,4590	0,0459	10,0	tbd	tbd	tbd	tbd	tbd	tbd	tbd	tbd	tbd	tbd	tbd	tbd
LP_L2_ACE	tbd	tbd	tbd	tbd	tbd	tbd	tbd	tbd	tbd	tbd	tbd	tbd	tbd	tbd	tbd
LP_L2_SMR	tbd	tbd	tbd	tbd	tbd	tbd	tbd	tbd	tbd	tbd	tbd	tbd	tbd	tbd	tbd
Total	**0,4590**	**0,0459**			**0,0000**	**0,0000**			**0,0000**	**0,0000**			**0,0000**	**0,0000**	

Table 7-3 Data Flow for Limb Products in Phase 2

Appendix A